AUTOMATIC STRAPPING MACHINE

MERCURY TP-702-59

IMPORTANT
Keep it

OPERATION, SAFETY & SPARE PARTS MANUAL

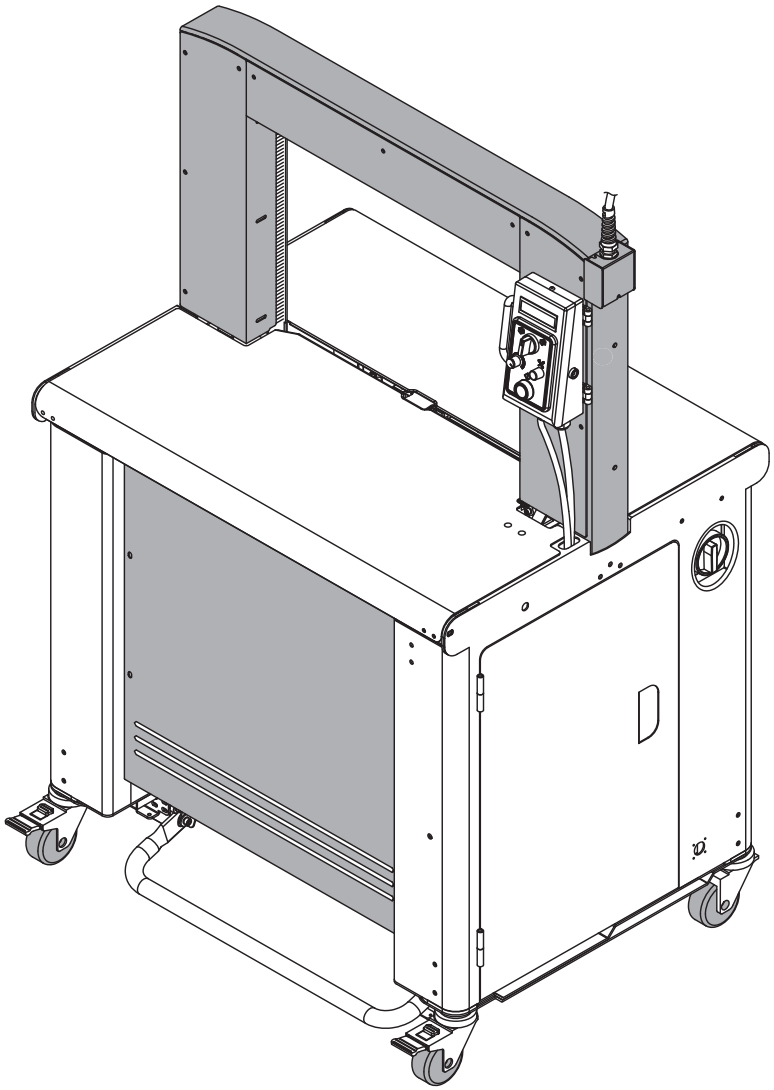

CE TÜV

Made in Taiwan

Read All Instructions Before Operating This Product

Original Instruction

CONTENTS

PART I

1 General Safety Instructions A1

1.1 Basic Operation A1

1.2 Basic Safety Precautions A1

1.3 Safety Instructions Governing Specific Operational Phases A2

1.4 Warning of Electrical Dangers A3

1.5 Grounding Instructions Shall Include the Following A3

1.6 Before Operating A4

1.7 During Operation A4

1.8 After Operating A4

1.9 Signs and Symbols A5

2 Machine Information A6

2.1 Areas of Application A6

2.2 Environment Information A6

2.3 Storage A7

2.4 Machine Description A7

2.5 Safety Devices A8

2.6 Technical Specification A9

3 Preparation Before Operating the Machine A11

3.1 Shipping A11

3.2 Transportation & Centre of Gravity A11

3.3 Construction Layout A12

3.4 Installation A13

3.5 Operation Space A15

3.6 Operating Elements A16

3.7 Instructions for Loading PP Strap..... A18

3.8 Auto Strap Feeding Process..... A20

4. Operating the Machine A22

4.1 Soft Tension Operation A22

4.2 High Tension Operation A22

4.3 Function Encoder A23

5. Adjustments..... A24

5.1 Strap Amount in the Accumulator Box..... A24

5.2 Adjustment for Feeding Pressure to the Accumulator Box A25

5.3 Adjustment for Heater Temperature A26

5.4 Necessary Adjustments After Changing Strap Width A26

5.5 Adjustment for Feeding/Reversing Pressure A29

5.6 Adjustment on Tensioning Rollers for High Tension A31

6. Troubleshooting..... A32

7. Maintenance A34

PART II

1. Wiring Diagram ……..B1

PART III

1. Strapping Head Unit ……...……C1

2. Bandway Unit ……..…….C43

3. Accumulator Unit …….C67

4. Reel Control Group ……..C93

5. Body Frame Unit ……....C101

6. Electric Control Unit ……..…….C141

PART I

1 General Safety Instructions

1.1 Basic Operation

- Read the operation and safety manual prior to using the strapping machine.
- The operation and safety manual should remain attached to the machine at all times.
- The machine may only be operated in accordance with its designated use.
- The strapping machine was built in accordance with state-of-the-art standards and recognized safety rules. Nevertheless, improper use can still result in injury to personnel or damage to the machine and other material property.
- Machine shall only be operated by trained personnel.
- Perform inspections and maintenance at regular intervals. Refer to the Maintenance section of the manual.
- The machine may not be put in operation before checking the respective devices.
- Safety devices must never be bridged or eliminated by any means.
- To transport the equipment only use lifting apparatus and loading devices with sufficient capacity.
- Always disconnect from external power supply when changing the location of the machine, even if the location should only be slightly changed. Connect power supply properly before returning to service.
- Do not alter or bypass protective interlocks.
- Do not alter circuits and machine unless authorized to do so by the manufacturer.

1.2 Basic Safety Precautions

- In addition to the instructions for operation, the user is to be instructed in all generally applicable legal or mandatory regulations relevant to safety or the environment.
- Long hair, loose-fitting garments, or jewelry can be a safety hazard. These items must be secured prior to equipment operation.
- Use protective equipment whenever appropriate or when required by law.
- Carefully observe all safety instructions and warnings attached to the machine. Keep safety labels clean and legible.
- People that are being trained to operate or service the equipment must be supervised by experienced personnel.
- Any electrical work performed on the equipment must be conducted by a skilled electrician or under the supervision of a skilled electrician. All work must be observed good electrical engineering practice and follow safety rules and local wiring standards.

1.3 Safety Instructions Governing Specific Operational Phases

- Avoid unsafe operation of the equipment.
- The machine is only to be operated when it is in good running order. Only operate the equipment in a safe manner; all protective and safety devices must be in place and fully functional. This includes removable safety devices, emergency shut-off equipment, noise-protection devices and exhaust fans.
- The machine is to be checked for damage and defects at least once each work shift. Any changes, including the working behavior of the machine, are to be reported immediately. If necessary, the machine is to be stopped and locked-out immediately.
- In case of a malfunction, the strapping machine is to be immediately stopped and locked-out until the fault has been eliminated.
- Before starting the strapping machine, make sure that the area is clear and safe.
- Do not place any tools or parts onto the machine.
- Operating personnel needs to be well trained before executing special operations and maintenance work; this work needs to be done with the proper supervision.
- Always check and tighten connections after maintenance or repair.
- After completing maintenance or repair, all safety devices must be replaced and checked for functionality before operating the equipment.
- To minimize the environmental impact, all consumables and replaced parts must be disposed of safely.
- Before starting the machine, check that the accessories have been stowed away safely.
- Avoid operating the machine in a fashion that could upset its stability.

1.4 Warning of Electrical Dangers

- Immediately remove power to the machine in case of trouble in the electrical system. Replace a fuse with one with the same style and ratings; pay particular attention to matching the specified current.
- Any electrical work performed on the equipment must be conducted by a skilled electrician or under the supervision of a skilled electrician. All work must be observed good electrical engineering practice and follow safety rules and local wiring standards.
- Inspect the electrical equipment of the machine at regular intervals. Tighten any loose connections. Check wiring for scorch marks; replace scorched wiring and determine and correct the reason for the overheating.
- When working on live equipment, ensure that a second person is available to cut power in case of an emergency. When appropriate, secure the working area with safety tape and a warning sign. Use insulated tools for electrical work.
- Before working on high-voltage assemblies, turn off the power supply. Carefully discharge the supply cable and short-circuit any energy-storage components such as capacitors.
- If the equipment was moved, carefully refit and refasten all parts removed for transport before reapplying power.
- Before moving the machine, remember to disconnect the power cable.

1.5 Grounding Instructions Shall Include the Following

- This product must be grounded. In the event of an electrical short circuit, grounding reduces the risk of electric shock. This product is equipped with a cord that has a grounding wire and an appropriate grounding plug. The plug must be plugged into an outlet that is properly installed and grounded in accordance with all local codes and ordinances.
- If repair or replacement of the cord or plug is necessary, connect the ground wire to the ground terminal of the plug. The wire with green insulation (with or without yellow stripes) is the grounding wire.
- Check with a qualified electrician or service person if the grounding instructions are not clear or if in doubt about the proper grounding of the machine. Do not modify the plug provided; if it will not fit the power outlet, have the proper outlet installed by a qualified electrician.

DANGER!

Improper installation of the grounding can result in electrocution.

1.6 Before Operating

- Read the instruction manual before operating the machine for your safety.
- Wear eye protection and safety gloves before operating this machine.

Eye protection must be worn

Safety gloves must be worn

- Verify that the power line voltage is correct.
- The machine must be properly grounded to avoid a shock hazard. All wiring must be in accordance with local wiring standards.
- The strapping machine can only be operated with polypropylene (PP) strapping; do not use polyester (PET) strapping or polyethylene (PE) cord strap.

1.7 During Operation

- The weight of the package cannot exceed 70kg. For package weight over 25kg, it may be necessary to use lifting aids for handling; while package weight over 40kg, it's necessary to handle it with conveyor system.
- The size of the package should not be less than 70 mm × 20 mm (2.75 inches × 0.75 inches).
- While running, check the unit for any unusual sounds or smoke emissions.
- Keep away from the inside of the arch while the machine is operating; do not put your hands or body into the arch when the machine is running.

NOTE: It is normal for the heater tongue to smoke during the sealing operation.

1.8 After Operating

- Remove dust and dirt from the unit; pay particular attention to the interior of the arch.
- Turn off the power when the machine is not in use.

1.9 Signs and Symbols

Symbol	Meaning
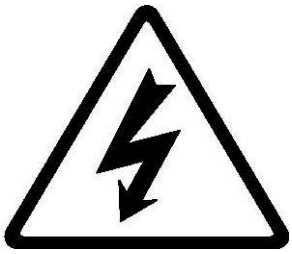	**Warning for dangerous voltage!** Contact with live electrical parts will result in severe injury or death.
	Warning for hot surface! Welding area is approximately 270°C(520°F) Allow sufficient time for the heater to cool down before any work in welding area.
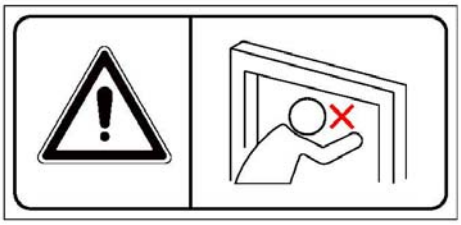	**Warning for danger!** Do not put your hands or body into arch working area when machine is operating.

2 Machine Information

2.1 Areas of Application

The strapping machine is to be used for strapping packages, cartons, paper boxes, newspapers, magazines and those materials using a polypropylene (PP) strapping for stabilizing purposes when in transportation. Be careful for rigidity of working materials, and don't try to pack agri-foodstuffs or other such material.

This machine was designed for certain applications only. We strongly recommend that this machine **NOT** be modified and/or used for any application other than for which it was designed. If you have any questions relative to its application **DO NOT** use the machine until you have had detail instruction from your dealer.

2.2 Environment Information

The strapping machine shall be installed in the following conditions:

- Supply voltage: 0.9 - 1.1 nominal supply voltage
- Source frequency: 0.99 - 1.01 nominal frequency
- Ambient temperature: 5°C - 40°C (41°F-104°F).
- Altitude: shall be at altitudes up to 1000m above mean sea level.
- Relative humidity: not exceed 50% at 40°C.
- Atmosphere: Free from excessive dust, acid fume, corrosive gases and salt.
- Avoid exposing to abnormal vibration.
- Don't use machine in dangerous environment.
- Don't use machines in damp or wet locations, or expose them to rain.
- Please provide a suitable illumination around the machine for safety operation.
- Work place of user should have a fire extinguisher or other devices that meet their local safety regulations, and always be careful.
- Internal parts requiring frequent inspection and adjustment, and maintenance areas must be provided with a suitable illumination around the machine.

If there may be harmful gases, fumes or dust generated during heating, user or system integrator must install exhaust system for the extraction of harmful substances.
The exhaust system shall be positioned according to the vent location. Please refer to the figure.

The user should refer to a professional expert or relevant authority to prevent the dangerous substance/ gas emitted by suitable means according to local /national environmental/health codes/regulations.

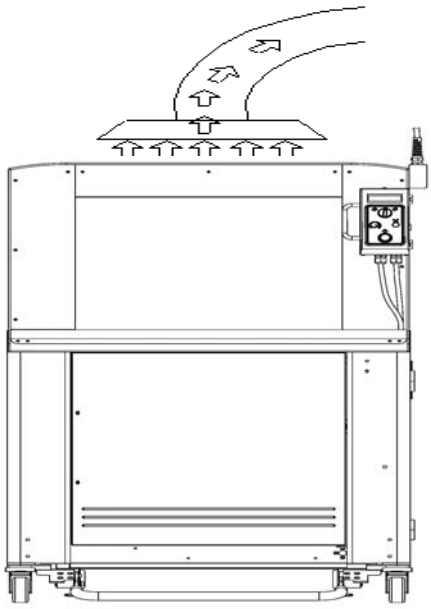

2.3 Storage

- The store room must be dry.
- Do not expose the machine to extreme cold or heat environment.
- Place the machine on an even floor in order to avoid any distortion.

2.4 Machine Description

- Automatic strapping machine for polypropylene (PP) strapping material.
- Strap width from 5mm to 9mm.
- Electronic heater temperature control.
- Hinged front table.
- Automatic strap loop ejection in case of strapping cycle without package.
- Extra tough construction.
- Simple, safe and user-friendly operation.
- Automatic strap feeding system.
- Automatic strap end detection.
- Mobile, with large table area and high capacity strap reel
- Table surface made of stainless steel.
- Strap tension adjustable from soft to very high.

2.5 Safety Devices

Danger!

Operate the machine only when all safety devices are at their place and are functioning correctly.

The machine has been constructed in accordance with the applicable legal regulations. The machine is reliable in operation. Nevertheless the machine may constitute a danger if it is operated in improper or undue condition.
Danger points that cannot be avoided due to equipment design are equipped with safety devices. If necessary, these points are marked on the machine with warning signs, and in the manual under working safety instructions.

The machine is equipped with the following safety devices:	
1.	Warning signs at the danger points of the machine
2.	Automatic shunt down of machine when front table opened
3.	Live parts are secured by cover

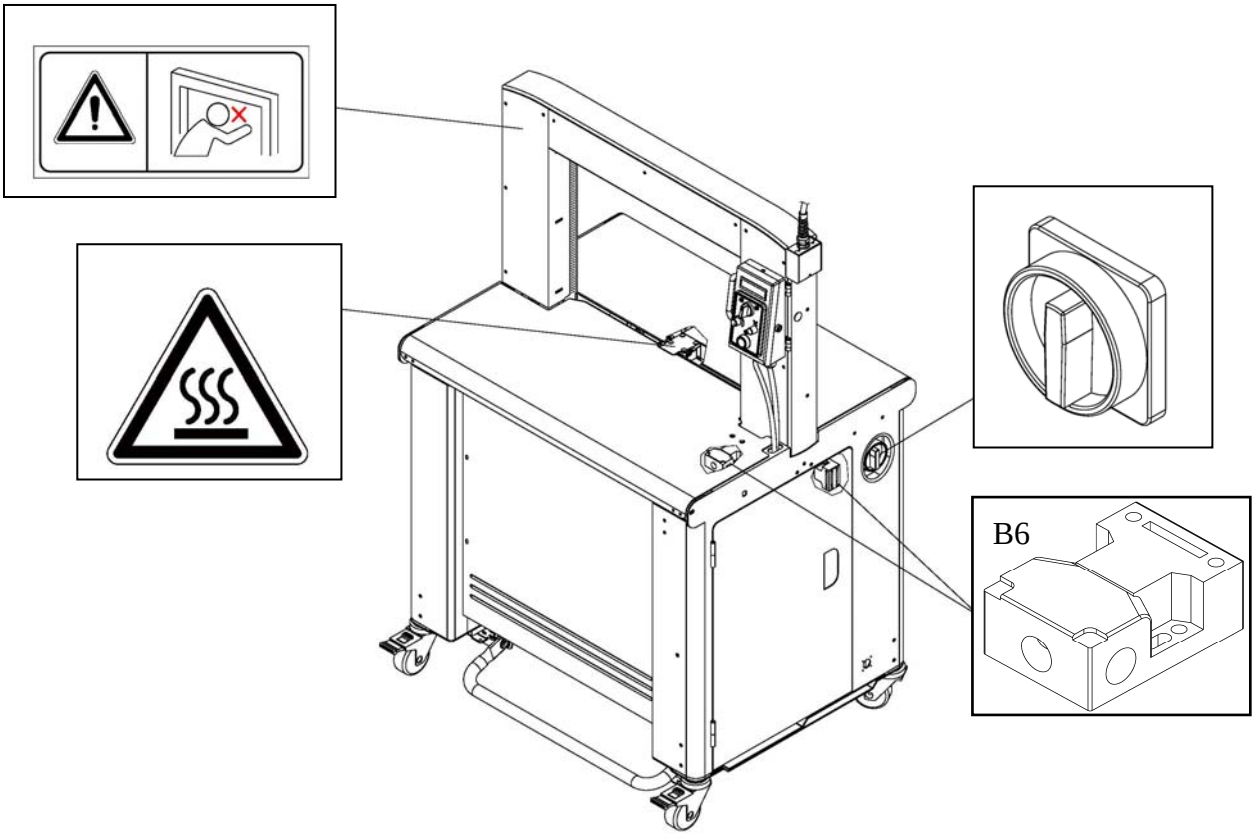

If it is necessary to make adjustments inside the machine during operation, after a strap jam for example, the rear table top can be unscrewed. Observe caution as the machine is still fully functional with the covers removed. When the front table top is opened, safety switch B6 is activated. This will remove power but the heating element will keeping heating.

CAUTION!

The heating unit operates at a very high temperature in order to melt the PP strapping. To prevent burns, avoid contact with this area.

2.6 Technical Specification

2.6.1 Electrical Specification

System configuration:	1L+N+PE (Ground)	1L+N+PE (Ground)
Nominal power:	0.5kW	0.5kW
Rated current:	3A	5A
Rated voltage:	220V/230V/240V	110V
Rated frequency:	50Hz	60Hz
Type of current	AC - single phase	AC - single phase

2.6.2 Technical Data

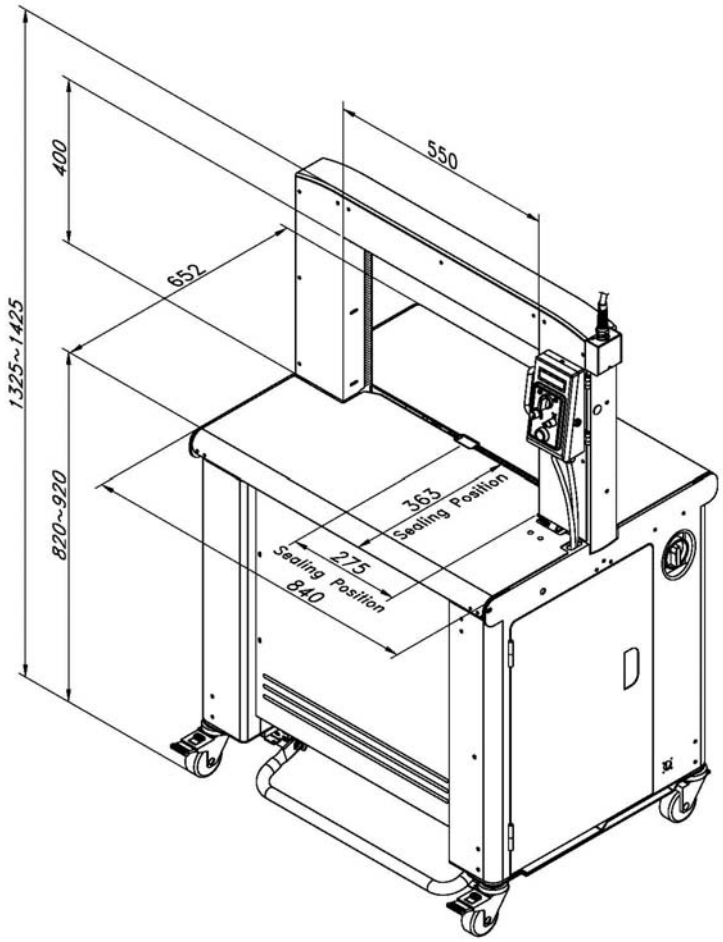

Strap width	5mm, 6mm, 9mm
Strap thickness	0.35mm up to 0.65mm (0.014” – 0.026”)
Strap coil diameter	Coil diameter 200mm (8” nominal) Outside diameter 420mm (16.5”) Width(Face) 190mm (7.5”)
Table height	Minimum – 820mm (32.3”) Maximum – 920mm (36.2”)
Weight	158kg (348 lbs.)
Noise emission	78 dBA
Ambient temp	5℃ ~ 40℃ (41℉ ~104℉)
Minimum package size:	70mm W × 20mm H (2.75” W × 0.75” H)
Maximum package size:	arch size minus 50mm (1.97”) EX: arch size: 550W×400H Max. package size: 500mm W×350mm H (19.7” W × 13.8” H)

3 Preparation Before Operating the Machine

3.1 Shipping

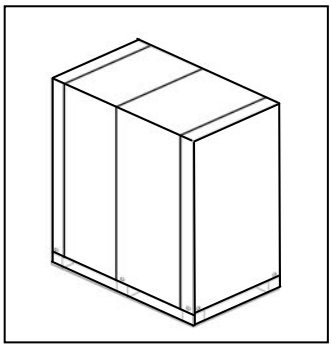

The equipment is delivered in transport units.
Each transport unit is loaded onto a wooden pallet, secured by polyester strapping.

3.2 Transportation & Centre of Gravity

The machine must be secured on a pallet for transportation. A forklift (or other lifting device) is necessary for lifting the machine to the pallet. The casters must be fit nicely in the recess on the pallet for proper packaging. Secure the machine to the pallet with plastic strapping across the top plates with a layer of cardboard on it to avoid damage. Cover the machine with sturdy box for protection and hold the whole box to the pallet with plastic strapping.

The machine can be removed from the pallet using forklift truck or other lifting device.

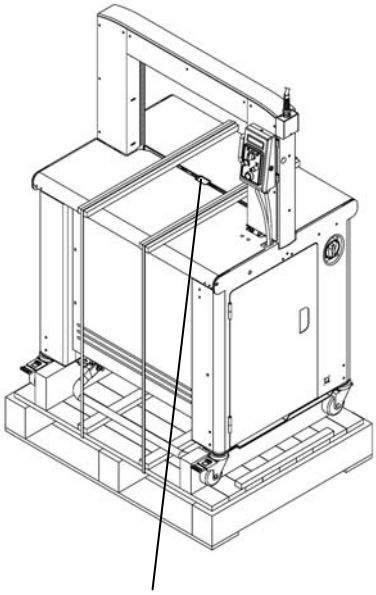

Center-of-gravity position

CAUTION!

Do not carry machine by having the forklift's fork under the arch, but only under the machine frame.

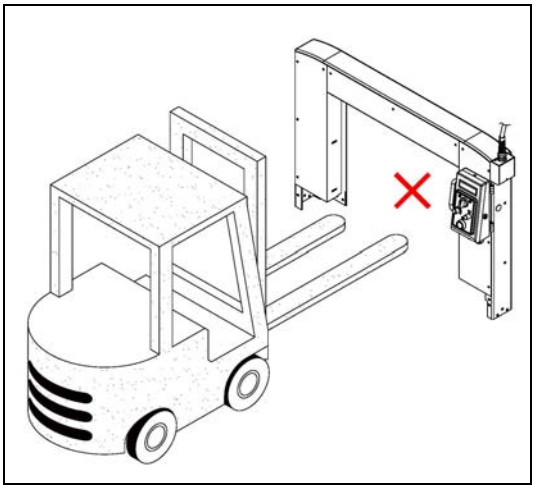

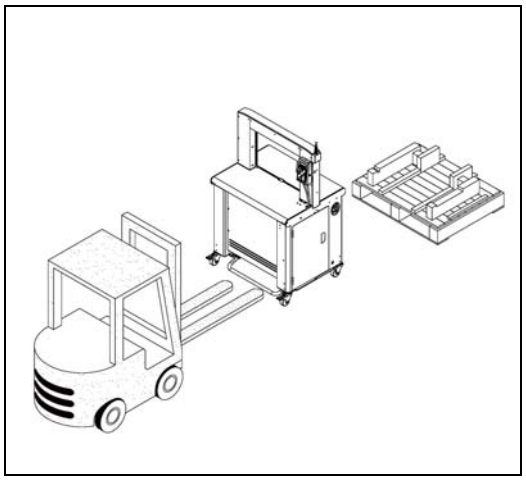

Danger to Lift!
Suspend loads can fall down.
By inappropriate mounting or fracture of hoisting device the load can fall down and cause serious injuries or death.
Do not step under suspended loads!
Use appropriate hoisting devices and fasteners.

3.3 Construction Layout

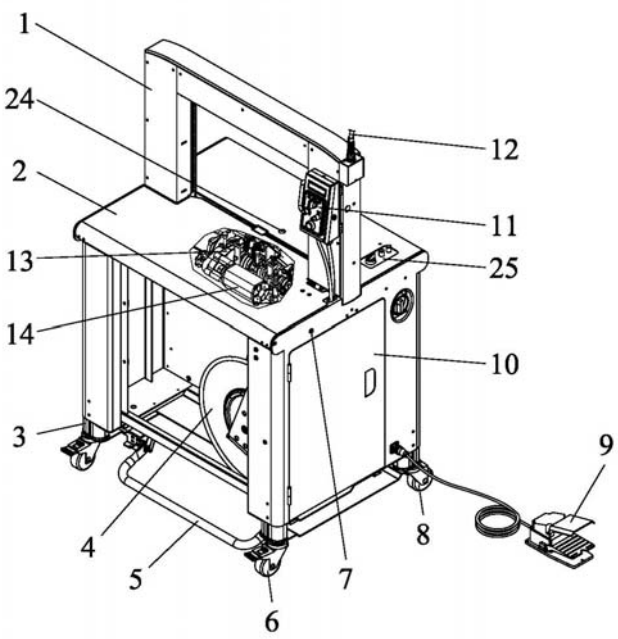

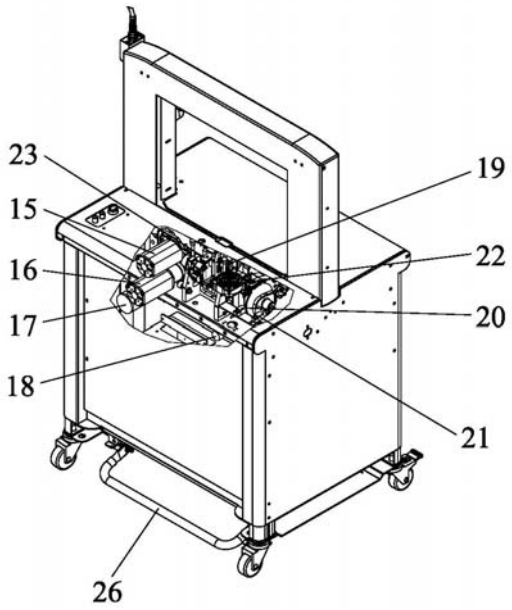

1. Arch
2. Upper Table Front
3. Adjustment Leg
4. Reel
5. Foot Bar (Front)
6. Caster (Brake)
7. Reel Brake Release
8. Caster (Free)
9. Foot Pedal (Option)
10. Side Door
11. Control Panel
12. Power Cord
13. Strapping Head Unit
14. Main Motor M1

15. Feed Motor M2
16. Tension Motor M3
17. Strap Accumulator Motor M4
18. Automatic Feed Motor M5
19. Proximity Sensor SQ1
20. Proximity Sensor SQ2
21. Proximity Sensor SQ3
22. Fan (M11)
23. Heater
24. Photo Eye (Option)
25. Timer Box (Option)
26. Foot Bar (Rear)(Option)

3.4 Installation

1. Remove the packing material and check that the machine is complete and without any shipping damage.
2. Installation for Gas Spring
   To protect the Gas Spring, the PIN on one side of the Gas Spring would be detached before shipment and the Reel Group would be also fixed by Cable tie (shown as following drawing). Before operating the machine, the Gas Spring must be installed well.

   a. Open the Right door of the machine and take out the plastic bag A. Inside this bag, there are an operation manual and parts as listed in following chart.
   b. Cut the Cable tie which is fixing the Reel Group.

Part No.	Description	Q'ty
	Operation	1
M7-4-101200	Shaft	1
THS0508N	THS, M5×8 (N)	2
SW05	SW, M5	2
PW05	PW, M5	2

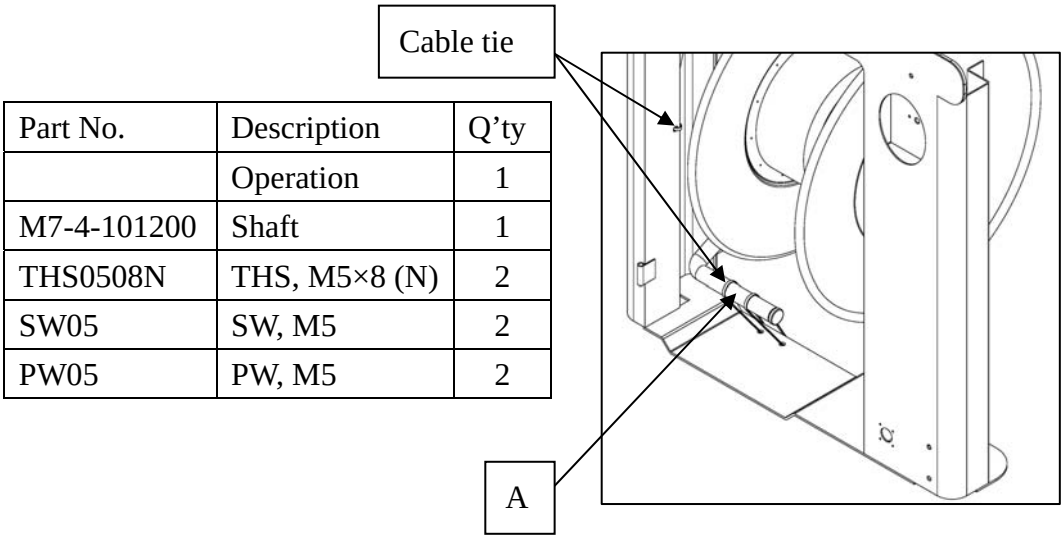

c. Have M7-4-101200 Shaft threading from inside of the machine and then lift the Reel Group and move the Gas Spring to make the PIN also goes through the hole and use 2 Allan Key with 3mm to fix THS0508N+PW05+SW05 all together.

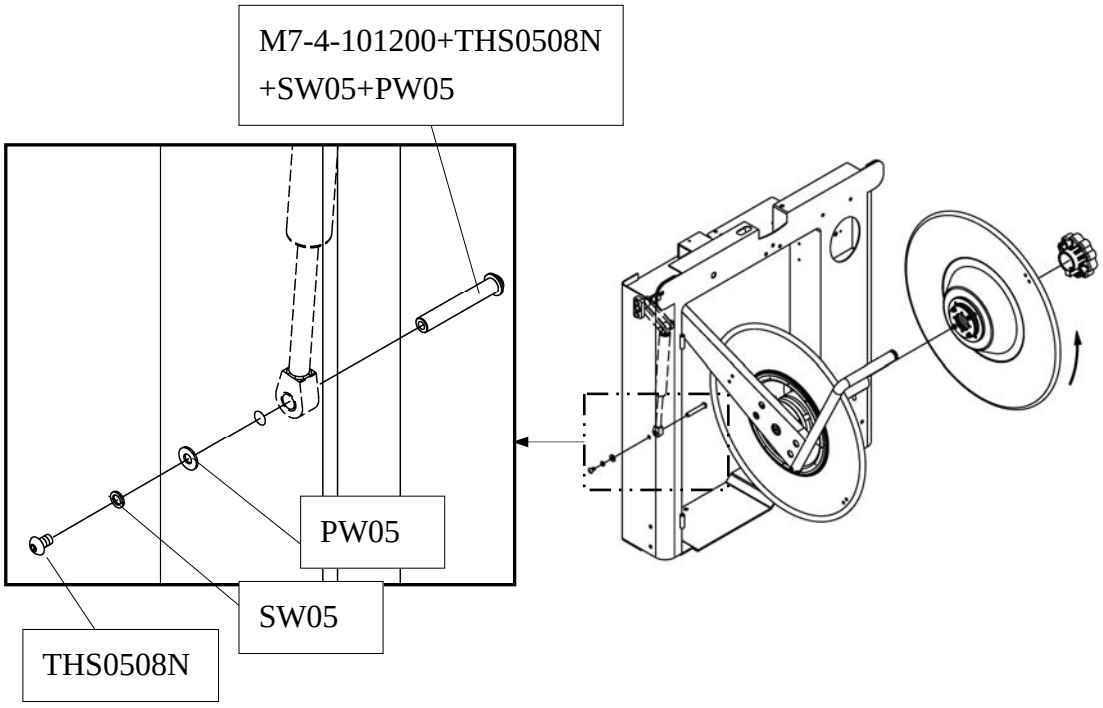

3. Adjust the table height by repositioning the screws underneath the machine frame (refer to below drawing). After adjustments, be sure to tighten all the fixing screws.

Caution!

Be sure to take out the wire for the proximity switch underneath the left side of machine to avoid any damage before adjusting the table height.

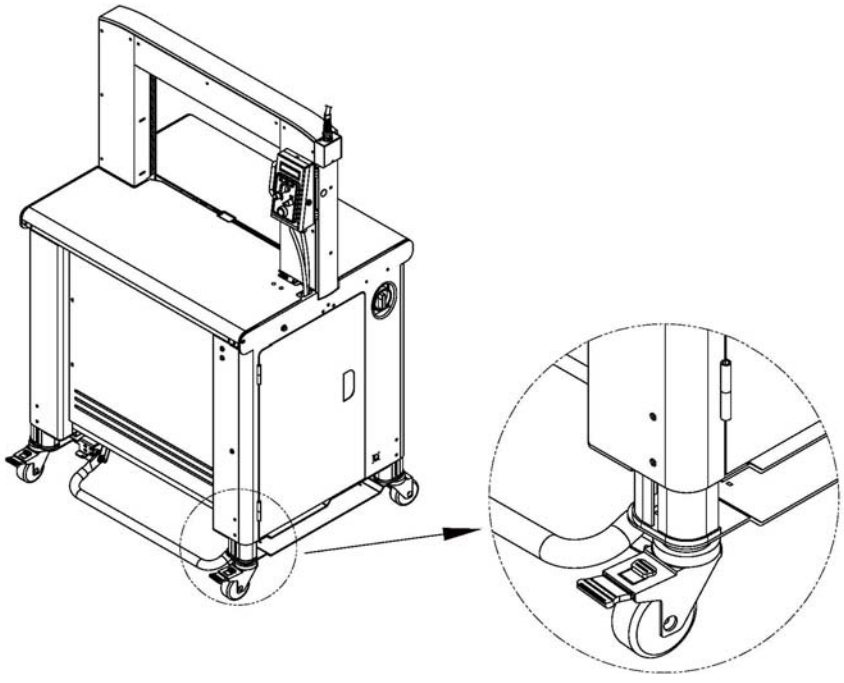

4. After positioning the machine ready for working, be sure to lock two front casters (with brake) to avoid machine's movements.
5. When moving the machine, be sure to un-lock the two lockable casters. Re-lock the two casters after re-positioning the machine.
6. Do not move the machine unless it's necessary. Before movement, be sure to turn off the power, unplug it, put the power cord on the machine and un-lock the front two lockable casters.
7. Minimum Requirements to the Electrical Supply

   - The electrical supply cord for the machine must have a minimum cross-section of at least 1.0 mm^2 (16 AWG).
   - The maximum power line fuse must not exceed 16 Amp.

3.5 Operation Space

Keep the area (A) and (B) free for the operator.

The area (A) is necessary for operating strapping machine.

The area (B) is necessary for changing the strap or adjusting strap amount in the accumulator.

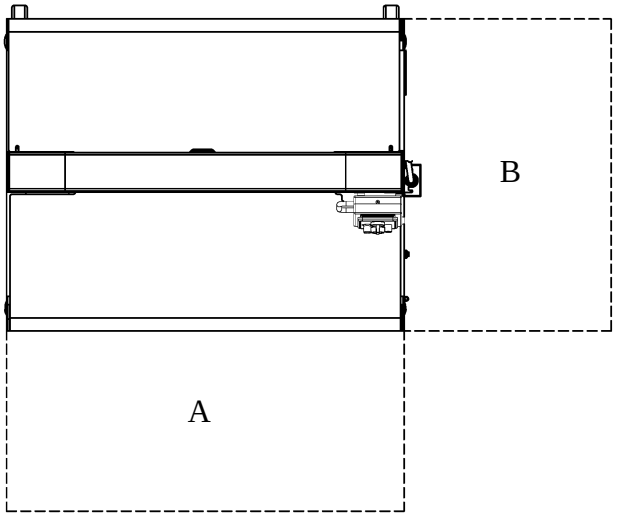

3.6 Operating Elements

1. **Main Power Switch:**
   Provides the machine with power.
   Switch to “1” position for turning the main power on.
   After strapping, switch it to “0” to turn off the machine.

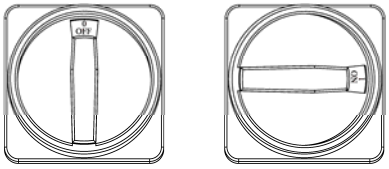

2. **LCD Display:**
   Indicates strapping condition of machine and error massages.

3. **Soft - High Tension Switch:**
   Switch to right for High strapping tension.
   Switch to left for soft strapping tension.

4. **Strap Tension Potentiometer:**
   Turn clockwise to increase strapping tension; turn counter-clockwise to reduce strapping tension. This potentiometer is only functional under High tension mode.

5. **Function Encoder:**
   Turn clockwise or counterclockwise to change strapping settings.

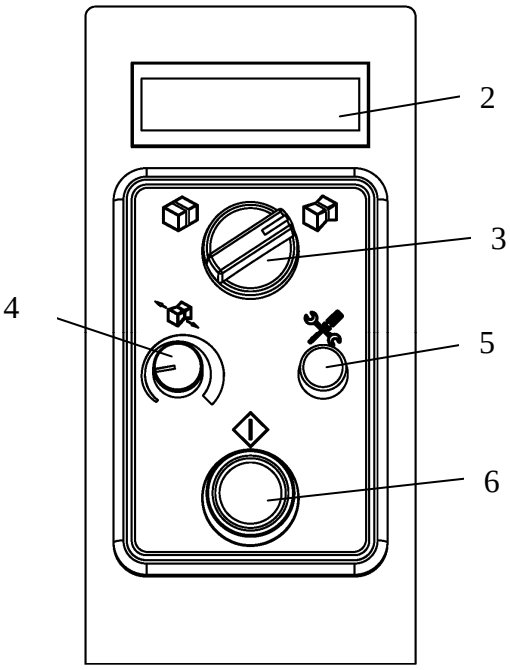

   Also, it offers settings for weld cooling time and photo eye timers (photo eye timer is available only if the machine comes with photo eye switch option) (expressed in page A23). Other settings can only be changed by technicians with password.

6. **Start Switch:**
   - After turning on **Main Power Switch**, you must press the start switch for machine to get ready for working.
   - To initiate a strapping cycle.
   - To clear up machine fault.(reset)

7. Reel Release Switch:

To release the dispenser for easily taking out strapping from it.

8. Foot Bar (Front):

To initiate a strapping cycle.
To clear up machine fault. (reset)

9. Foot Pedal Switch (Option):

To initiate a strapping cycle.
To clear up machine fault. (reset)

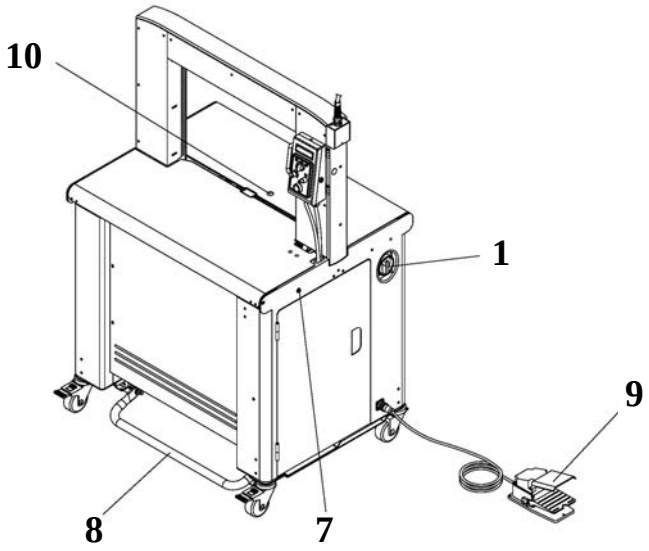

10. Photo Eye Switch (Option)

The purpose of the photo-eye switch is to automatically initiate strapping cycles when a package is detected.

The controls for the photo-eye are shown in the figure below.

Function	Function
0	The photo-eye is disabled. The strapping cycle must be initiated with Start switch on the control panel, Foot bar switch or optional foot pedal.
1	A single strapping cycle: initiates a cycle when a package is detected by the photo-eye. Delay time for initiating the cycle is controlled by TIMER 1.
N	Multiple strapping cycles: initiates a cycle when a package is detected by the photo-eye. Cycling continuously until the photo-eye is no longer “detects” a package. The cycle timing is determined by TIMER 1 and TIMER 2.
Timer 1	Sets the delay time from the moment that a package is detected until the 1st strapping cycle initiates. This allows an operator to properly position a package for the first strap. It is adjustable from zero to five seconds.
Timer 2	It’s the delay time (interval) between strap cycles. When multiple strapping cycles are needed, this timer is for an operator to determine the interval between each straps. It is adjustable from zero to five seconds.

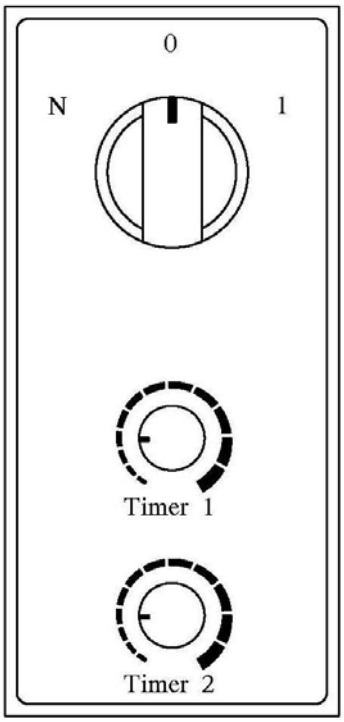

11. Foot Bar (Rear)(Option):

To initiate a strapping cycle.

To clear up machine fault. (reset)

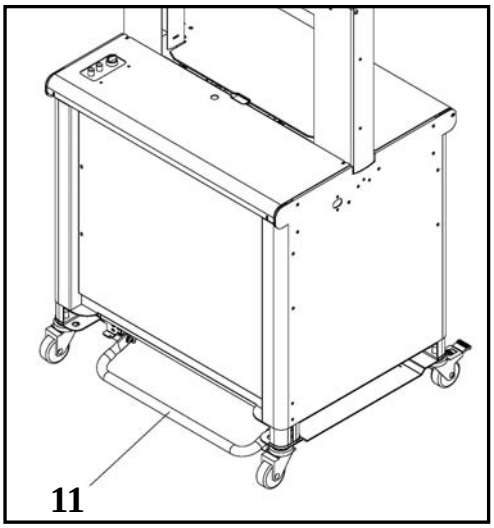

3.7 Instructions for Loading PP Strap

3.7.1 Specifications

Polypropylene Strap

Width: 5, 6 or 9mm

Thickness: 0.35-0.65 mm (0.014” –0.026”)

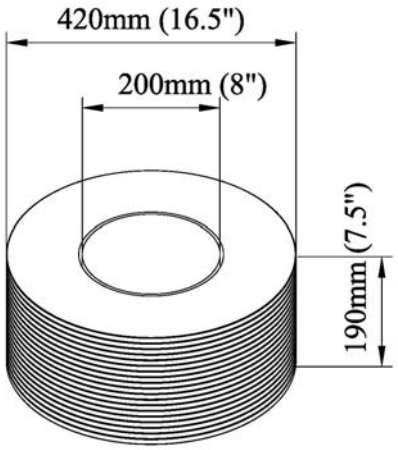

Note:

Strap coil should not be heavier than 12kg (27 lbs). Too heavy strap would damage the Reel support system.

Strap which has excessive camber as illustrated in figure below cannot be used.

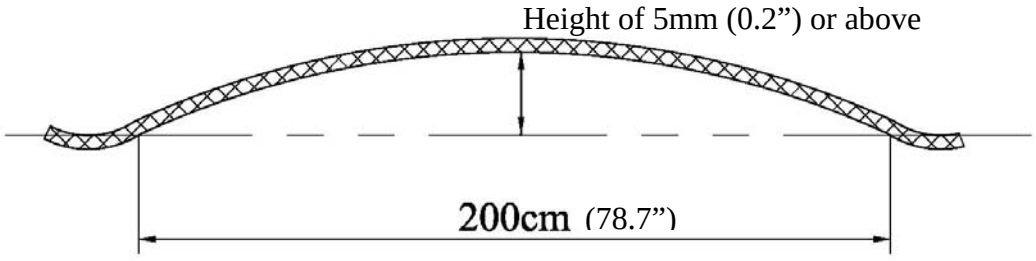

3.7.2 Strap Reel Installation

1. Open the side door on the right of the machine (fig. 1).
2. Lift the reel handle up all the way to the end (fig. 1).
3. Release the Reel Nut Handle by pressing and turning it to the left.
4. Take out the Outer Flange.
5. Install a new strap coil onto the drum according to the instructions on the reel.
6. Put Outer Flange back and the Reel Nut Handle. Turning the Reel Nut Handle to the right to lock it.
7. Remove the protective straps (B) and the stickers (A)
8. Press down the reel handle to put the reel back into the machine.

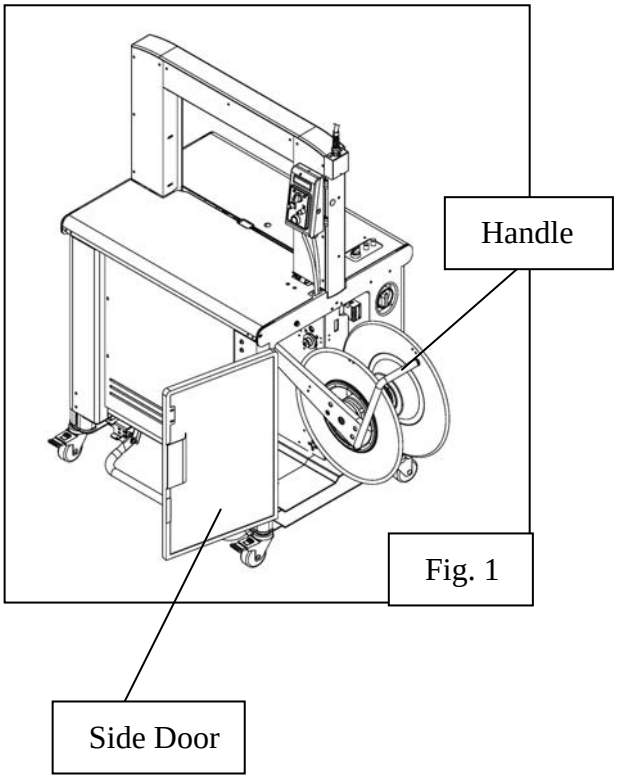

Fig. 1

Note:
The Reel Nut Handle is released by turning to the left. Tighten it by pressing and turning it to the right.

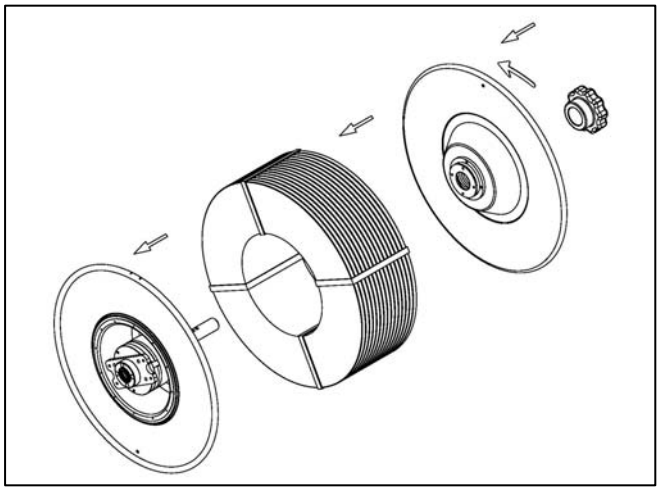

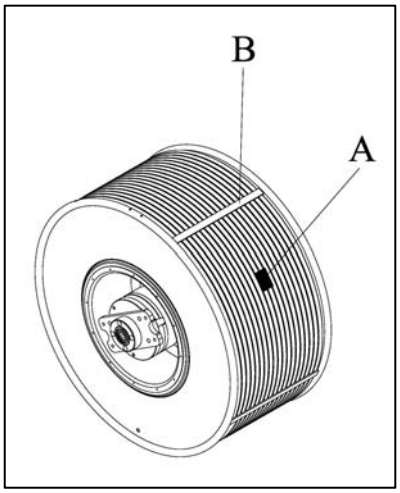

3.8 Auto Strap Feeding Process

1. Turn Main Power Switch on the right side of machine to the right (at 1 position), and press Start Switch.
2. Open the side door on the right.
3. Press “Reel Release Switch A” and pull out around 90cm strap.
4. Inset the strap to Guide Roller B and then to Guide C as showing in Fig. c & Fig. d.

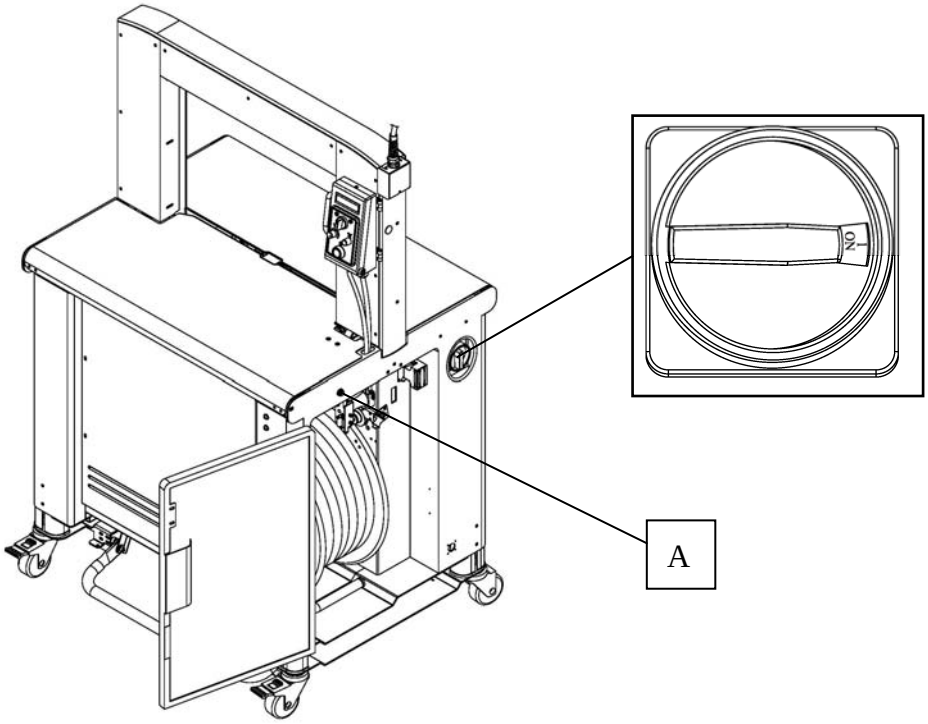

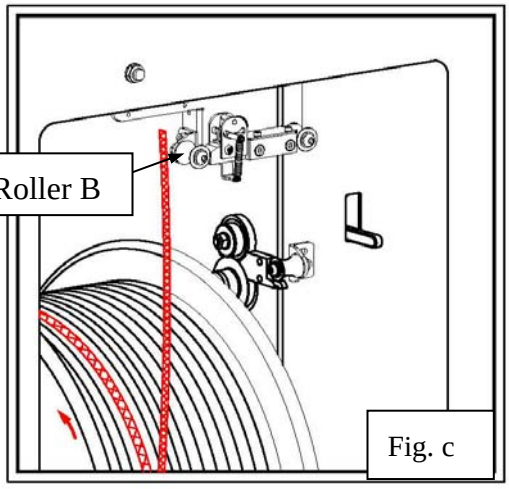

Fig. c

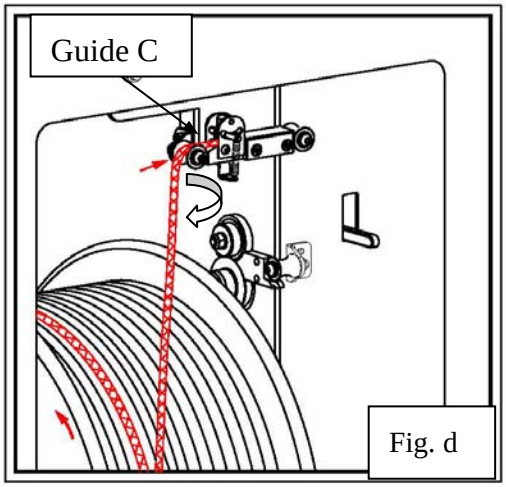

Fig. d

5. Keep threading the strap till the Guide Roller D (Fig. e).
6. Turning the strap downward and thread it to Roller E then to Roller G & Roller H (Fig. f & Fig. g).
7. Lift Lever F and then thread the strap around 2-3mm ahead the rollers (Fig. g) then release Lever F.

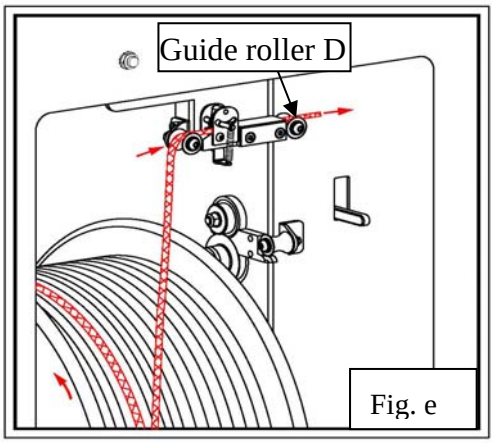

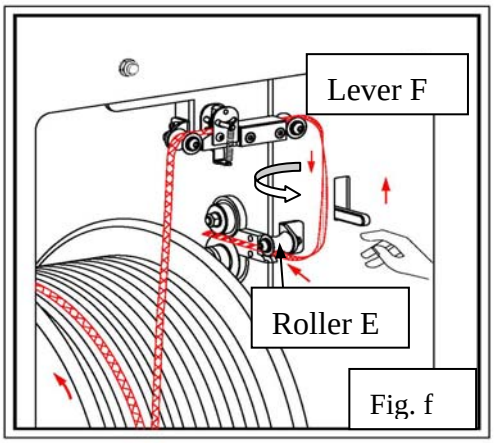

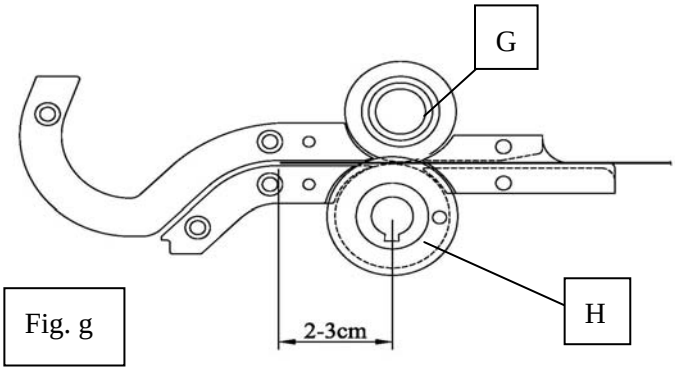

Caution:

If strap is fed more than 6cm ahead the rollers, it could make Auto Strap Feeding failed.

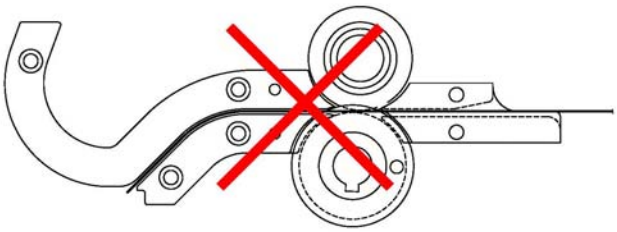

8. Close the side door and press Start Switch. Machine will complete the Auto Strap Feeding in 5 sec. and have the strap feeding to the sealing point.

Caution!

In the process of Auto Strap Feeding, only the Start Switch is functional. Neither Foot bar switch nor foot pedal switch will function.

Caution!

The cut edge of the strap must be free from burrs to avoid failure in Auto Strap Feeding.

4. Operating the Machine

After switching on the strapping machine, heater starts to warm up and LCD display continues to be on until the heater reaches its operating temperature (about 2 minutes).

Caution!
Machine will not operate until heater reaches to operating temperature.
The heater fans continue to run until heater reaches operating temperature.

Switch **Main Power Switch** to Position "1"

↓

Heater warms up and LCD display keeps on lightening

↓

Ready!
LCD display is off

4.1 Soft Tension Operation

1. Place a package in the middle of table beneath the chute.
2. Push start switch or actuate foot bar switch or foot pedal switch (option) to start strapping.

NOTE!
When operating in soft tension mode, the strap tension potentiometer does not function.

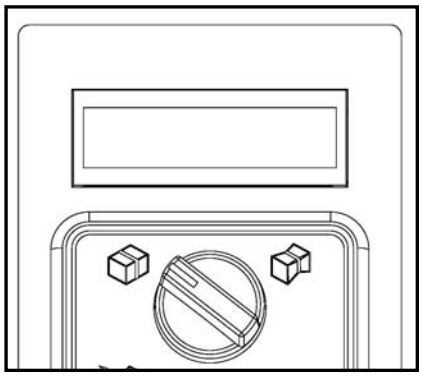

4.2 High Tension Operation

1. Place a package in the middle of table beneath the chute.
2. Properly adjust the strap tension potentiometer according to various package.
3. Push start switch or actuate foot bar switch or foot pedal switch (option) to start strapping.

Attention!

Keep hands away from the strapping area.

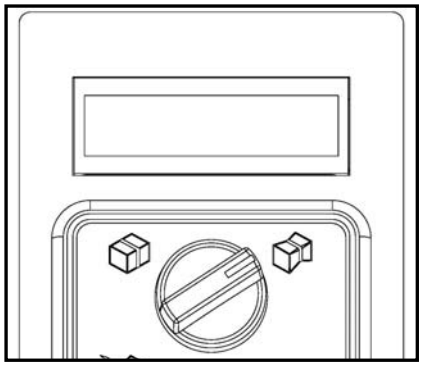

If hands are caught by P.P. strap accidentally, be sure to turn off the Main Power Switch first and then cut the strap.

4.3 Function Encoder

LCD display will show various timers such as cooling time, timer 1, timer 2…etc. After pressing the function encoder for over 2 seconds, turn the knob to choose the timer needed to be changed. Press this knob to confirm the timer needed altered and turn it again to alter the value, and then press it again to confirm this alteration.

T1: see A17 timer 1
T2: see A17 timer 2

T5: cooling time timer, Range 0-0.6S

T4: Press bar delay time, Range 0-3S

PH1> 0: Photo eye control box no function (Disable)

1: Photo eye control box has function (Enable)

SQ6> 0: sensor for chute home position no function (Disable)

1: sensor for chute home position has function (Enable)

Press>0: Press device no function (Disable) (for TP-702P only)

1: Press device has function (Enable) (for TP-702P only)

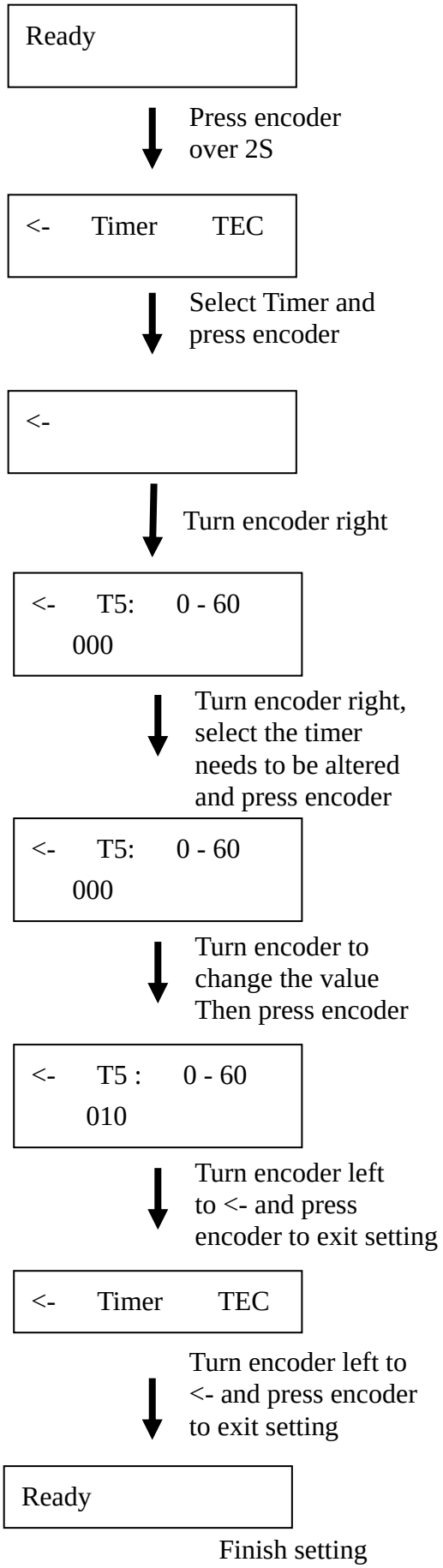

5. Adjustments

5.1 Strap Amount in the Accumulator Box

The machine has been already well set for storing enough amount of strap in accumulator Box.

However, some adjustments may be required, depending on the actual quality or thickness of the strap used.

The strap supply in the accumulator box should be sufficient for about 2-5 strapping cycle.

(It depends on the package size and the arch size. Fewer cycles are available for bigger arch or bigger package.)

Caution!

Excessive amount of strap in the Accumulator Box can lead to strap jam (too curved) and cause feeding problem.

Insufficient amount of strap in the Accumulator Box can lead to short feed problem or decrease strapping speed.

The adjusting mechanism for amount of strap is inside the machine, at the rear side of machine.

In case that there is insufficient amount of strap in the Accumulator Box, loosen the Nut A and turn the Screw Bolt B counterclockwise. After adjustments, be sure to tighten the Nut A to avoid unstable strap accumulation.

In case that there is excessive amount of strap in the Accumulator Box, loosen the Nut A and turn the Screw Bolt B clockwise. After adjustments, be sure to tighten the Nut A to avoid unstable strap accumulation.

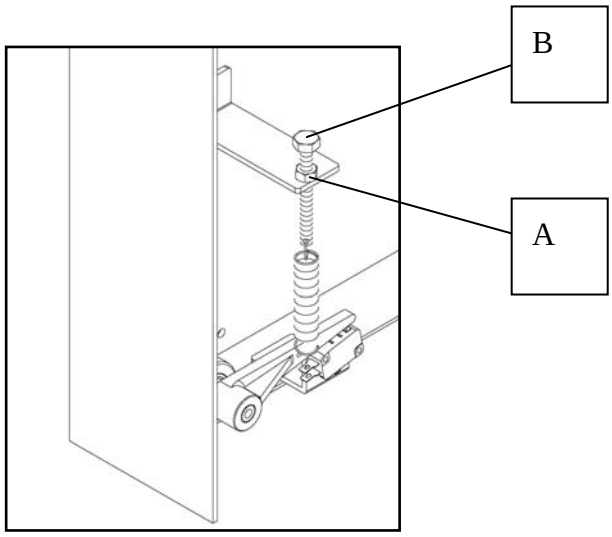

5.2 Adjustment for Feeding Pressure to the Accumulator Box

The machine has been already well set for enough feeding pressure offering enough strength for pulling strap from strap coil to accumulator box. It might be necessary for some adjustments to increase feeding pressure if you are using smooth strap.
When it's necessary for increasing the feeding pressure, please loosen the Nut A and turn Nut C upwards to increase the strength of Spring B. Be sure to tighten Nut A by turning it counterclockwise after adjustments.

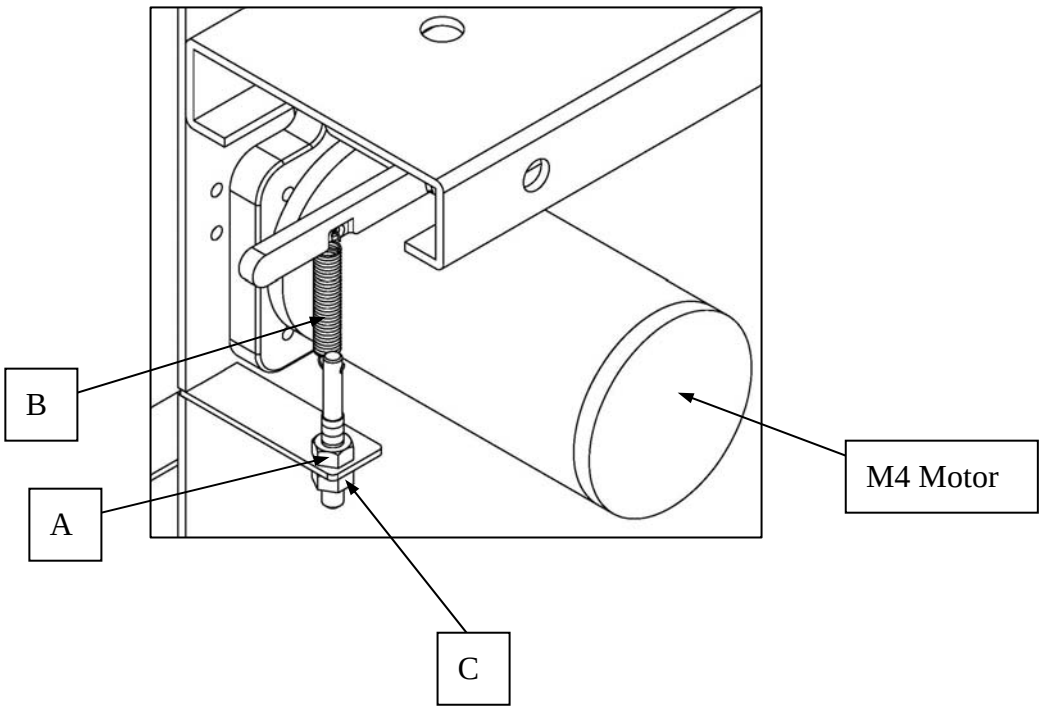

Caution!

Too much feeding pressure could lead to feeding problem as the strap would be scraped by the rollers easily as show below.
Insufficient feeding pressure would lead to short feed problem as the strap is insufficient in the accumulator box.

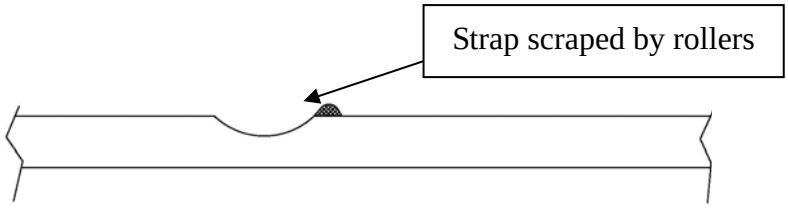

5.3 Adjustment for Heater Temperature

The machine has been already well set for proper heater temperature.
It might be necessary to do some adjustments according to temperature in working environment, and the quality of P.P. strap to ensure better sealing efficiency.
Turn ‘’A’’ clockwise to increase the heater temperature and turn it counterclockwise to decrease the heater temperature.

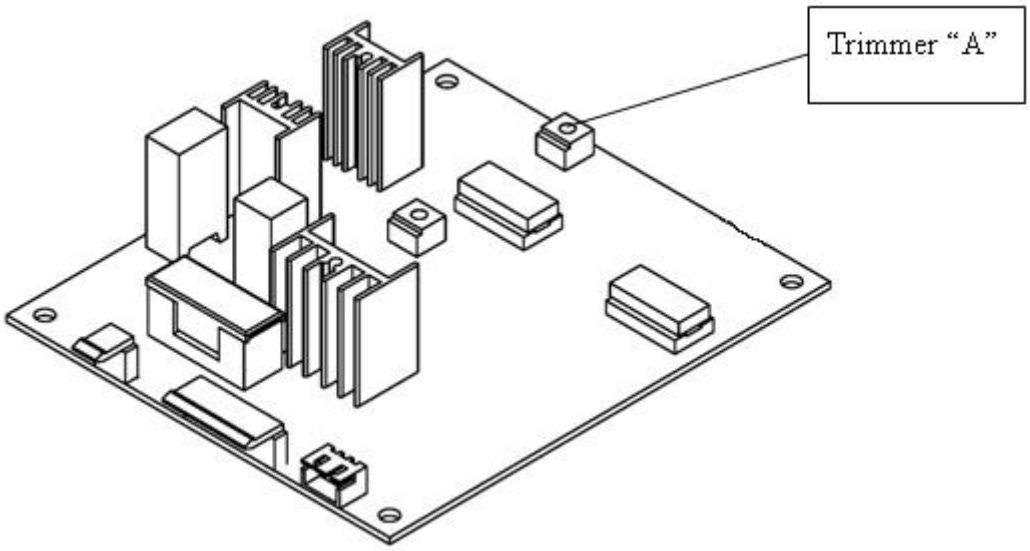

5.4 Necessary Adjustments After Changing Strap Width

1. Adjusting “Strap Guide”

Adjusting the A (Strap Guide) according to the strap and make sure the width B is around 0.5mm (0.02”) wider than the strap.

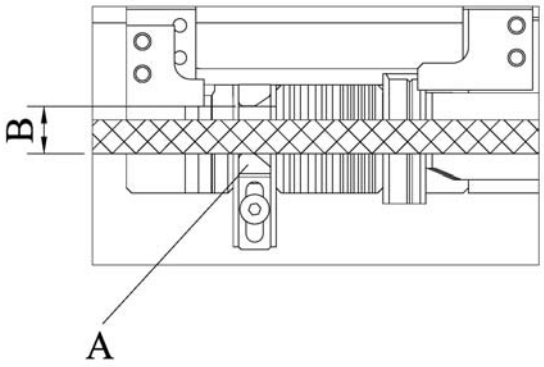

Caution:

If B is too wide, it would lead to sealing problem. However, if it’s too narrow, it would lead to feeding problem.

2. Adjusting "M7-1-311500 Adjusting Plate" only for 5mm and 6mm.

Loosen #25 HBS0412N×2 to remove #11 M7-1-310001 Upper Guide Ass'y (For 5-6mm) from the machine. Then loosen FMS0408×4 on it and take a piece of p.p. strap which would be running by this machine for properly adjusting M7-1-311500 Adjusting Plate (Only 5-6mm). Make sure the width B is around 0.5mm (0.02") wider than the strap. After proper adjustment, tighten FMS0408×4 and have M7-1-310001 Upper Guide Ass'y (For 5-6mm) fixed back to the machine.
While having M7-1-310001 Upper Guide Ass'y (For 5-6mm) fixed back to the machine, be sure its left side must be around 3mm higher from Press Bar Ass'y M7-1-220000. Also the right bottom side of M7-1-310001 Upper Guide Ass'y (For 5-6mm) should have some clearance between M7-1-301400 Guide Wheel (For 5-6mm). This clearance should not be wider than the strap's thickness or strap would probably slip out while doing Auto Strap Feeding.

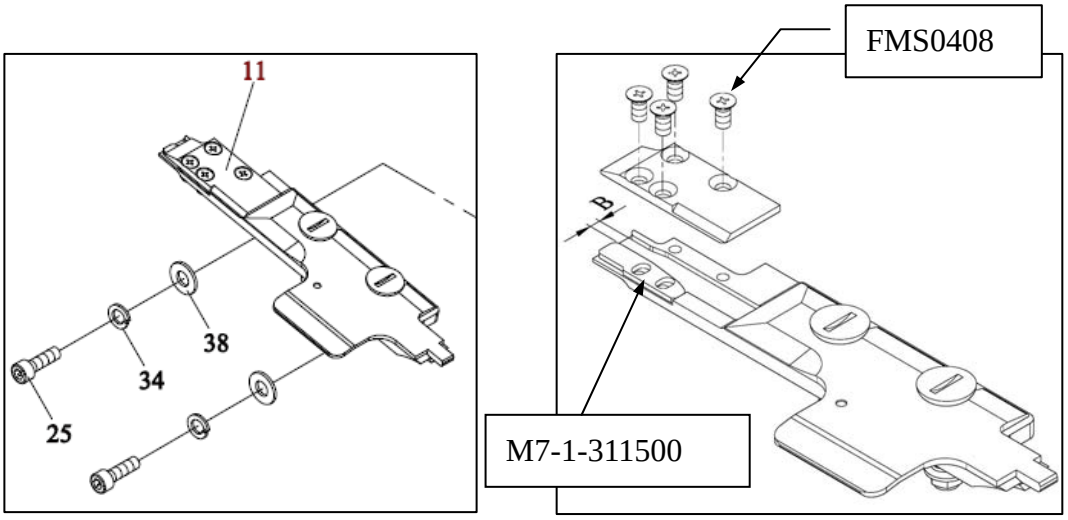

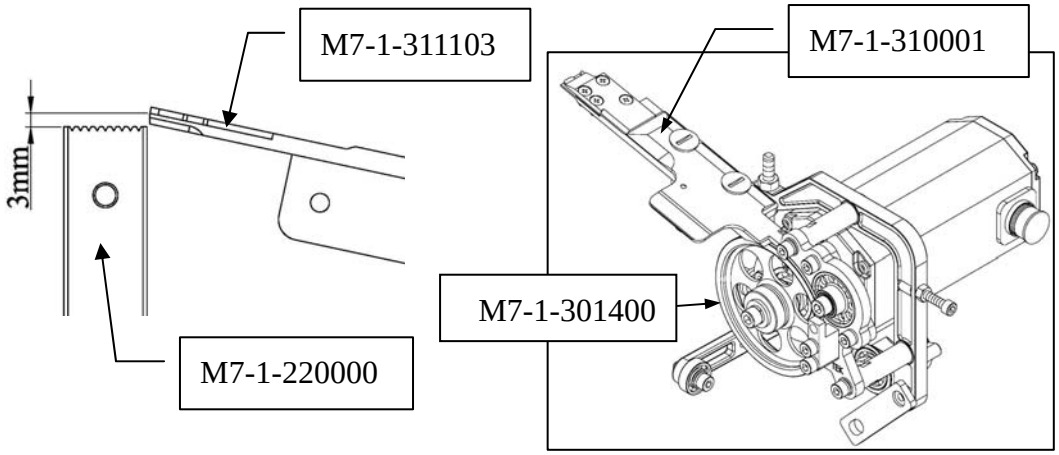

3. Adjusting “Right Strap Guide”

Loosen the screws on the “Right Strap Guide” and take it out. Then loosen the 2 screws B (HBS0408N) and adjust A according to the strap. Be sure D is about 0.1mm wider than the strap. After adjustment, tighten screws B and put the “Right Strap Guide” back.

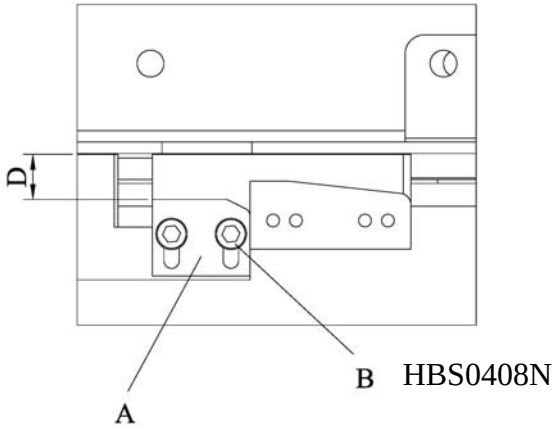

M7-2-201400

Caution:

If D is too wide, it would lead to sealing problem. However, if it’s too narrow, it would lead to feeding problem.

4. Adjusting Brush Clearance in the Arch

The brush clearance in the left side and upper left should be about the strap width. The brush clearance in the upper right should be about 2-3mm narrower to the strap.

The brush clearance in upper side of right chute should be the same to the clearance in right side of upper arch. The brush clearance in the lower right should be 4-5mm narrower to the strap.

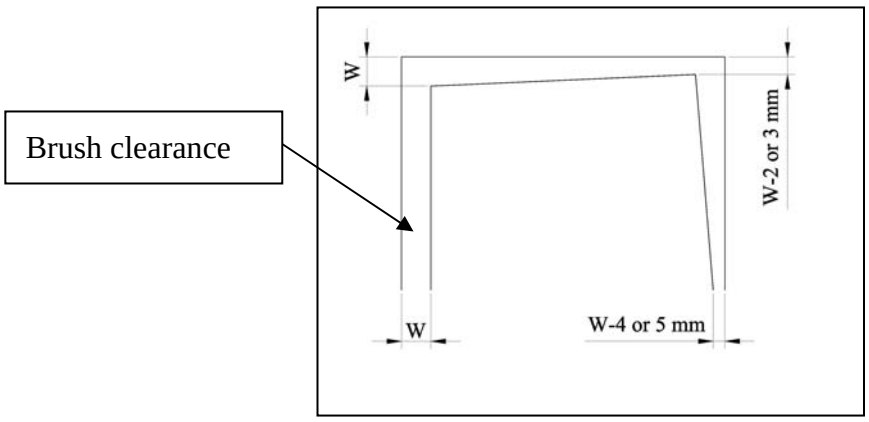

Note:
The brush clearance could be various according to different package size. The brush clearance needs to be bigger for not having any effect on reversing especially when the package size is close to the arch size.

5. Adjusting Strap Amount in the Accumulator Box

Different strap widths might have effects on the strap amount in the accumulator box. Please do the adjustment according to 5.1 if necessary.

5.5 Adjustment for Feeding/Reversing Pressure

The upper table rear was screwed by captive screws. To take it out, please loosening the captive screws about 5mm first and then lift the end side of rear side up and slide it out.

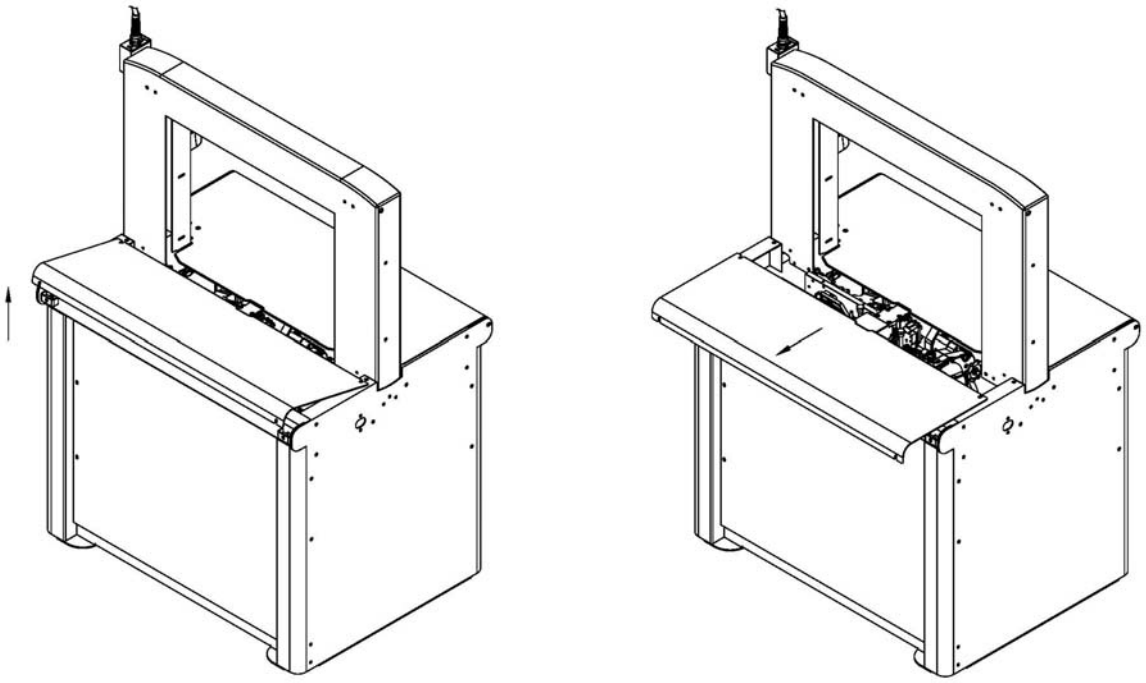

1. Adjusting the Pressure for Feeding

The machine is already well set for proper feeding pressure. However, according to different strap characteristics (such as smoother surface or different thickness), some adjustments for feeding pressure are still necessary.
If short feed problem happens a lot, and it is a result of improper feeding pressure, please do the following adjustments:

Loosen Nut B and turn Nut A clockwise to increase the feeding pressure. Or loosen Nut A and turn Nut B counterclockwise to decrease the feeding pressure. After adjustments, be sure to tighten these 2 Nuts well.

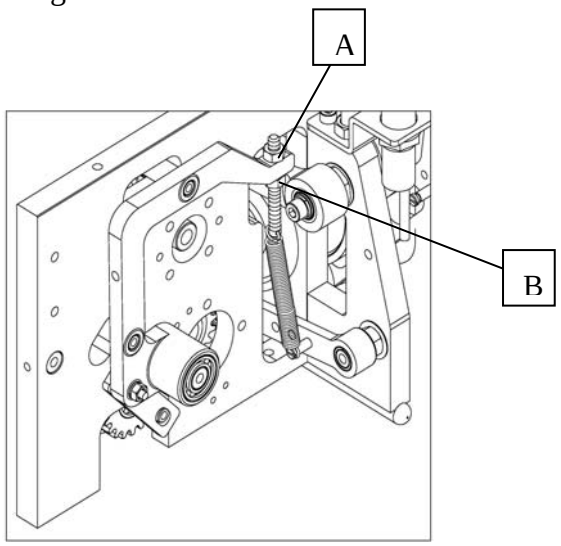

2. Adjusting the Pressure for Reversing

The machine is already well set for proper reversing pressure. However, according to different strap characteristics (such as smoother surface or different thickness), some adjustments for reversing pressure are still necessary.
If machine often has incomplete reversing problem, and it is a result of improper reversing pressure, please do the following adjustments:

Take out the part (TA-073 Spring Hook) from C position to B or A position in order to increase the reversing pressure.

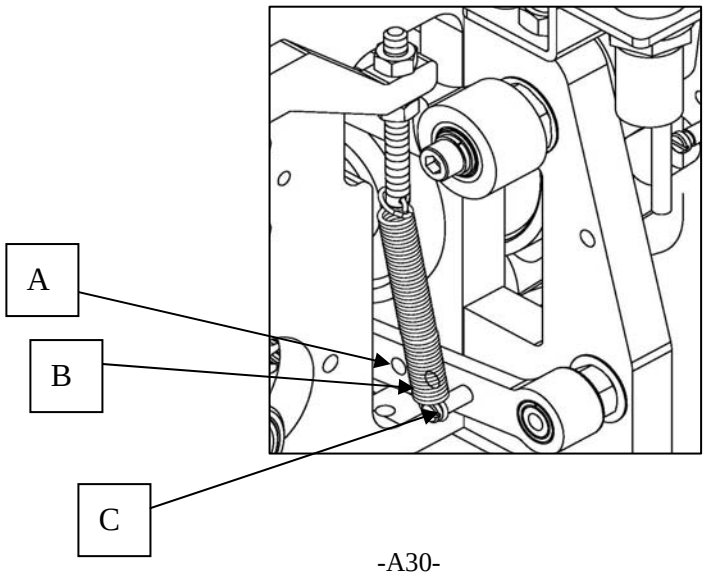

5.6 Adjustment on Tensioning Rollers for High Tension

The machine is already well set for proper pressure for high tension. However, according to different strap characteristics (such as smoother surface or different thickness), some adjustments on pressure for high tension might be necessary.

When insufficient strapping tension occurs even the Soft-High tension switch is at “high” position and it is a result of pressure for high tension, please turn Nut D clockwise. This can solve the problem of insufficient strapping tension at high tension and strap slipping between A & B due to this.

Note:

When the pressure for high tension is set too high, the tension for strapping would get lower.

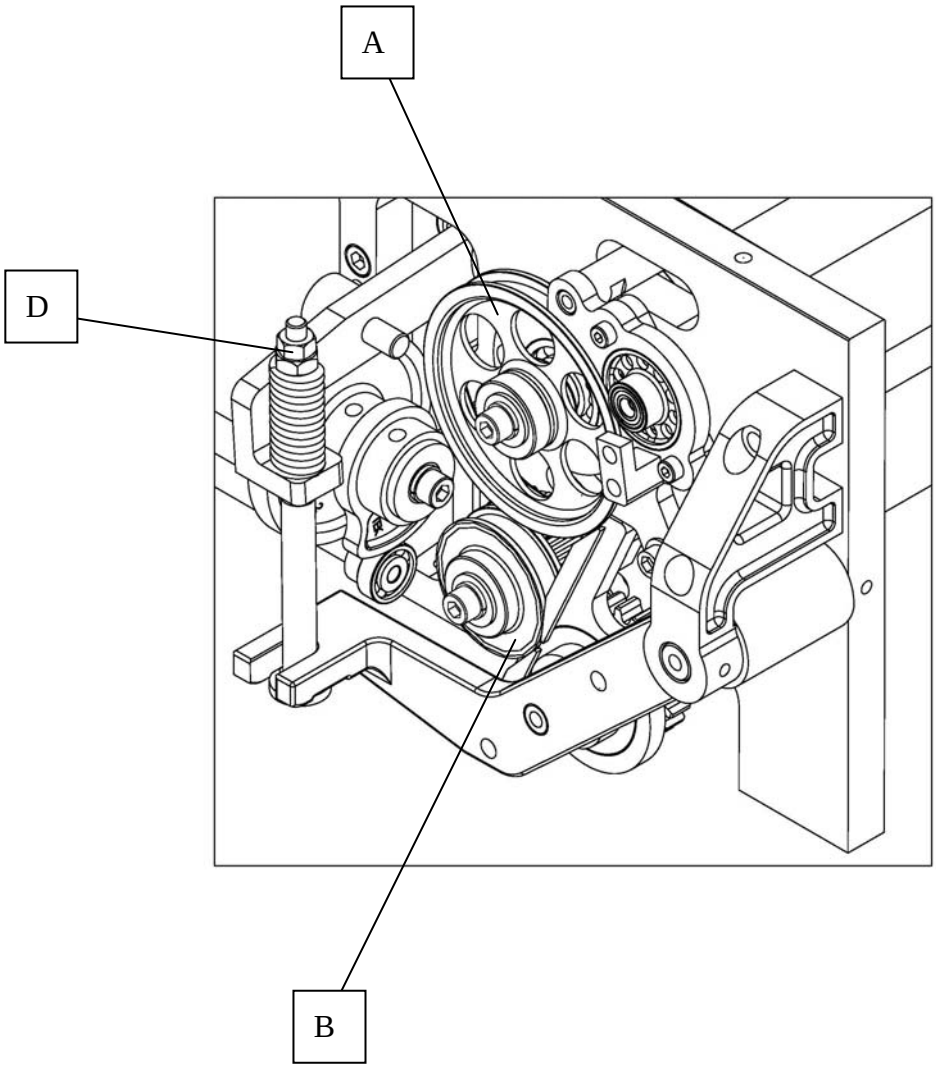

6. Troubleshooting

The LCD display would flash and show failure message when machine is not working due to malfunction.

Message shown on the LCD could be follows:

1. **Reminder message:**
   a. Push Start: Please press the Start Switch to make machine function. This is especially necessary after the Safety Switch is released or after you just turn on the machine.
   b. Load Strap: Load a new roll of strap or re-do the Auto Strap feeding again.
   c. B6 open; K1 open: When it shows this message after you press the Start Switch, it means the Safety Switch might not be closed or the K1 in the control box is abnormal.

2. **Malfunction from switches:**
   a. S1 Error: This means the Start Switch or the Foot Pedal is continuously triggered before activating them. Please check if any of these 2 Switches is defective.
   b. S5 Error: This means the Reel Release Switch is continuously triggered before activating it. Try to press it by hand to see if it's defective.
   c. SQ1 on Error: The SQ1 is triggered when doing Auto Strap Feeding. Check if the SQ1 or the Switch lever is defective.
   d. SQ9 failure: Foot bar is not able to function properly and cause it not able to go back to home position.

3. **Malfunction from procedures:**
   a. ASF failed: Auto Strap Feeding failed. It might be caused by wrong inserting direction or inserting too much strap. Please re-do the Auto Strap Feeding.
   b. Feed jam: Resulting from not being able to feed strap to the sealing position.

   When Feed jam occurs, press the Start Switch or Foot bar first to let the arch open and strap comes out of the arch. Hold the strap by left hand and then press the Start Switch or Foot bar again. Machine would reverse the strap a little bit and cut it, and then machine would go back to home position and feed again.
   If this does not solve the problem, please take out the jammed strap by following steps:

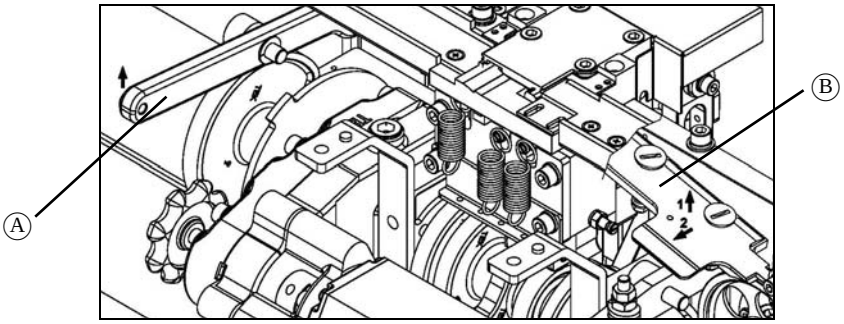

b-1. Open Upper Table Front Ass'y M7-5-210020.

b-2. Lift up the Lever Ⓐ (M7-2-101400/M7-2-101410) with left hand and take out the Cover Ⓑ (M7-1-311220) for the Upper Guide with right hand at the same time.

b-3. Take out the jammed strap and cut it.

b-4. Put the cover (M7-1-311220) for the Upper Guide back to its position and put the Upper Table Front Ass'y back as well. Push START switch in the control panel to RESTART machine.

If the Feed jam problem still cannot be solved, the following causes have to be checked as well:

Fault	Cause	Remedy
Feed jam	Strap is too curved	Change strap
	Insufficient feeding pressure	Adjust feeding pressure according to 5.5
	Too much strap amount in the accumulator box and has caused strap to be curved	Adjust to proper strap amount in the accumulator box according to 5.1

c. <u>Other malfunctions:</u>

Fault	Cause	Remedy
Sealing failure	Too much debris on both sides of heater plate	Clean both sides of the heater plate by fine sandpaper
	Insufficient heater temperature	Increase the heater temperature according to 5.3
	Insufficient cooling time	Increase cooling time according to 4.3
Insufficient strap tension	Soft-High tension switch is at “soft” position	Turn it to “high” position
	Lubricant drops into tension roller incautious	Clean the lubricant
	Too much debris in the gear of tension roller	Clean the debris

7. Maintenance

Warning:
Before any maintenance or repairs on the machine, set the Main Power Switch to "O" (OFF). Wait about 5 minutes for cooling down the heater to avoid burns with this area.

1. Cleaning and Lubrication

The high reliability and long service life of the strapping machine will depend on regular cleaning and maintenance.

ATTENTION!
All the important strap transportation components, such as the drive rollers and the strap guides, must be kept free from oil and grease. (lubricant)

The lubricant has to be non-resinous.
The lubricant is SAE 30

2. Maintenance

Only use original spare parts supplied by manufacturer.

Daily:
Use air gun to clean the following indicated positions (nearby the cutters, strap guide and accumulating feeding rollers) daily.
Remove plastic residue in the machine.

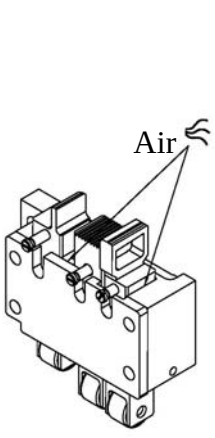

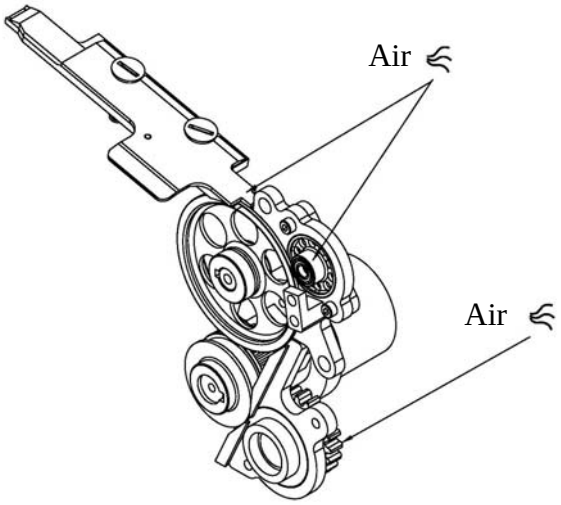

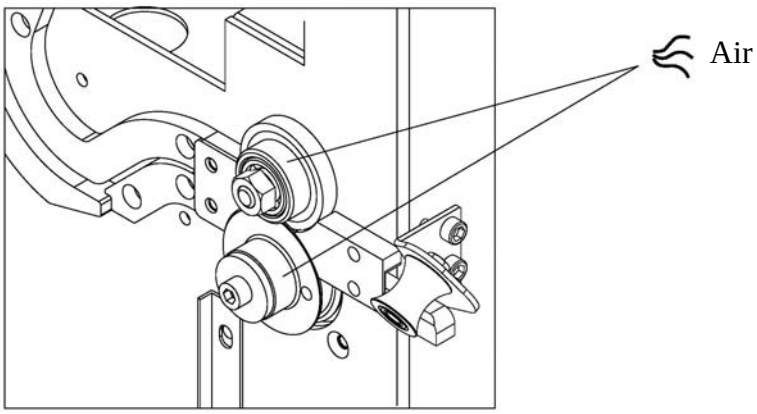

Weekly:

Lubricate front bar, press bar, rear bar and shafts in arch weekly.

Please refer to the following mesh areas for instruction.

Before lubricating, be sure to clean the parts first to avoid mixing oil and debris which might have a bad effect on machine's function.

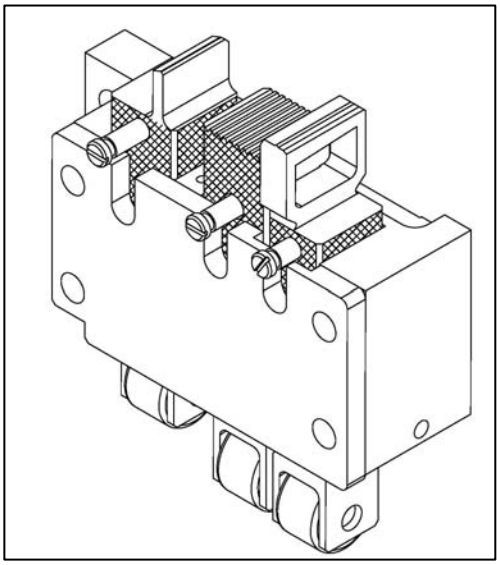

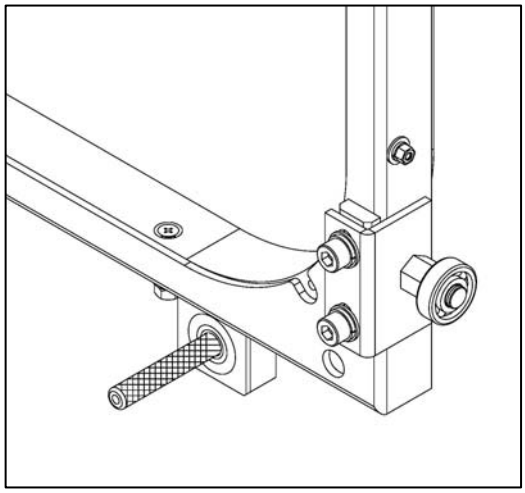

Check the machine by strapping several bundles for any failures.

Monthly : (or 100,000 strapping cycles)

Clean both sides of heater plate and polish with fine sandpaper if necessary

ATTENTION: Make sure the welding plate is cool first!!

Check Front Bar, Press Bar, and Rear Bar for moving upward and downward neatly. The Slide Table and Strap Track Frame should be able to go back to its home position by the force of spring as well.

Be sure to clean any debris in the tension roller

6 Months : (or 500,000 strapping cycles)

Check heating element, replace and re-adjust it if necessary.

Check strap cutter in sealing head, replace it if necessary.

Check if the connector at wiring housing to printed circuit board is firmly fixed.

Check if the safety switch on front table or right door functions well.

Make machine ready for operation. Strap one bundle manually several times, paying attention to mal-functions, repeat procedure.

Initiating several cyclings with package manually for testing and pay attention to any mal-functions. Make sure the strap accumulating function is well. If necessary, replace the assistant rollers, do proper adjustments to accumulating feeding pressure or to the clearance in the reel brake.

Slightly lubricate the sealing head (bearing points) with light lubricant if necessary.

1 Year : (or 1,000,000 strapping)

Replace deflection roller if it shows visible changes.

In case of loud noise at bearings: locate them, replace the bearings.

Get machine ready for operation again, strap one bundle manually several times, paying attention to malfunctions.

3. Cleaning / Replacing Heater

Cleaning

1. Turn off the power and open the Upper Table Front Ass'y and Upper Table Rear Ass'y (M7-5-210001, M7-5-22001, M7-5-201401 & M7-5-230001).
2. Make sure that the heater cools down already and the temperature is not too hot to let you get hurt.
3. Loosen the fixed screws of the heater cover (M7-1-101700) and remove it from the machine.
4. Remove the screw (HBS0540HN) of Heater Crank (M7-1-141100).
5. Remove the Return Spring (T7-1-64130) of the Heater Crank (M7-1-141100).
6. Remove the Heater Crank (M7-1-141100) by pushing it backward.
7. Clean both upper side and down side of the Heater carefully with fine sander paper.
8. Re-installation the heater back to the machine in reverse sequence.

Replacing

1. Same sequence as step 1-6 mentioned above.
2. Turn over the Heater Bracket (M7-1-141300) so that you can loosen the nuts of the heater.

3. After you loosen the nuts, turn the Heater Bracket back to its original position.
4. Take out the Heater Ass'y and make sure the insulations stay intact. If any of insulation fall and get broken, please replace with new one to avoid welding problem.
5. Install the new Heater Ass'y in reverse sequence.
6. Rotate the M1 Handle (T7-1-11240) forward till the Heater Ass'y goes to welding position.
7. Make sure the clearance between Heater Ass'y and Slide Table (M7-1-131600) is about 1.8 - 2.2mm.
8. If the clearance is too big, adjust it by turning HBS0530N clockwise. If the clearance is too small, adjust it by turning HBS0530N counterclockwise.

shape	classification		shape	classification
	HBS			ER
	TMS			RR
	PMS			SR
	FMS			SP
	HB			BR
	THS			MB
	HSS			KYA
	CAP			KYB
	HN			KYC
	WN			HBW
	FLG			PWA ϕ 8x ϕ 12~ ϕ 16x0.8~1.2t ϕ 6x ϕ 13~ ϕ 14x0.8~1.2t
	NTE			PWB ϕ 8x ϕ 14~ ϕ 16x1.2~1.5t ϕ 6x ϕ 15~ ϕ 16x1.2~1.5t
	PN			PWC ϕ 8x ϕ 20~ ϕ 23x2.0t ϕ 6x ϕ 16~ ϕ 19x2.0t
	PW			PWD
	SW			DS
	TW			TTP
	BWW			FTP

PART II

1. Wiring Diagram

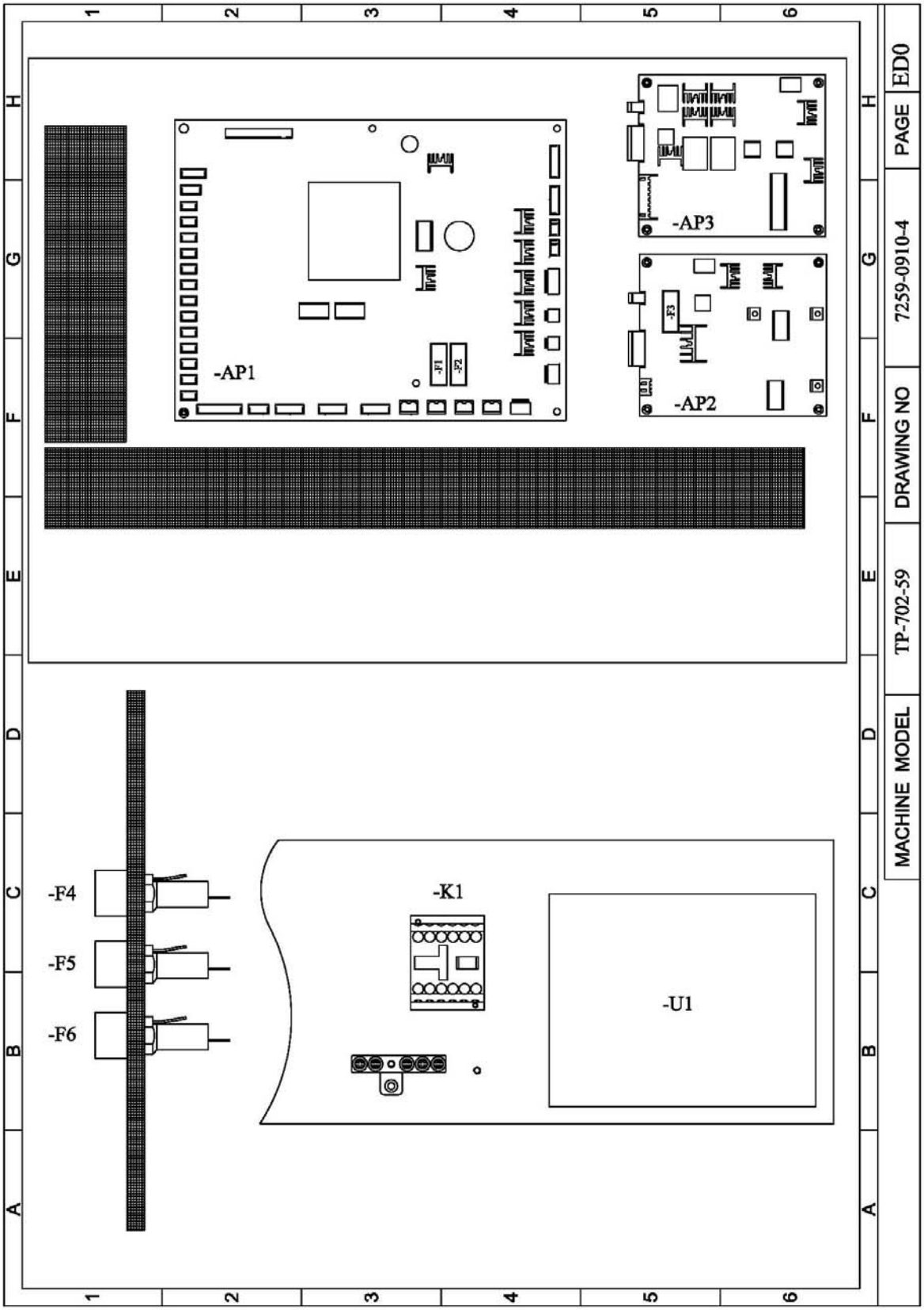

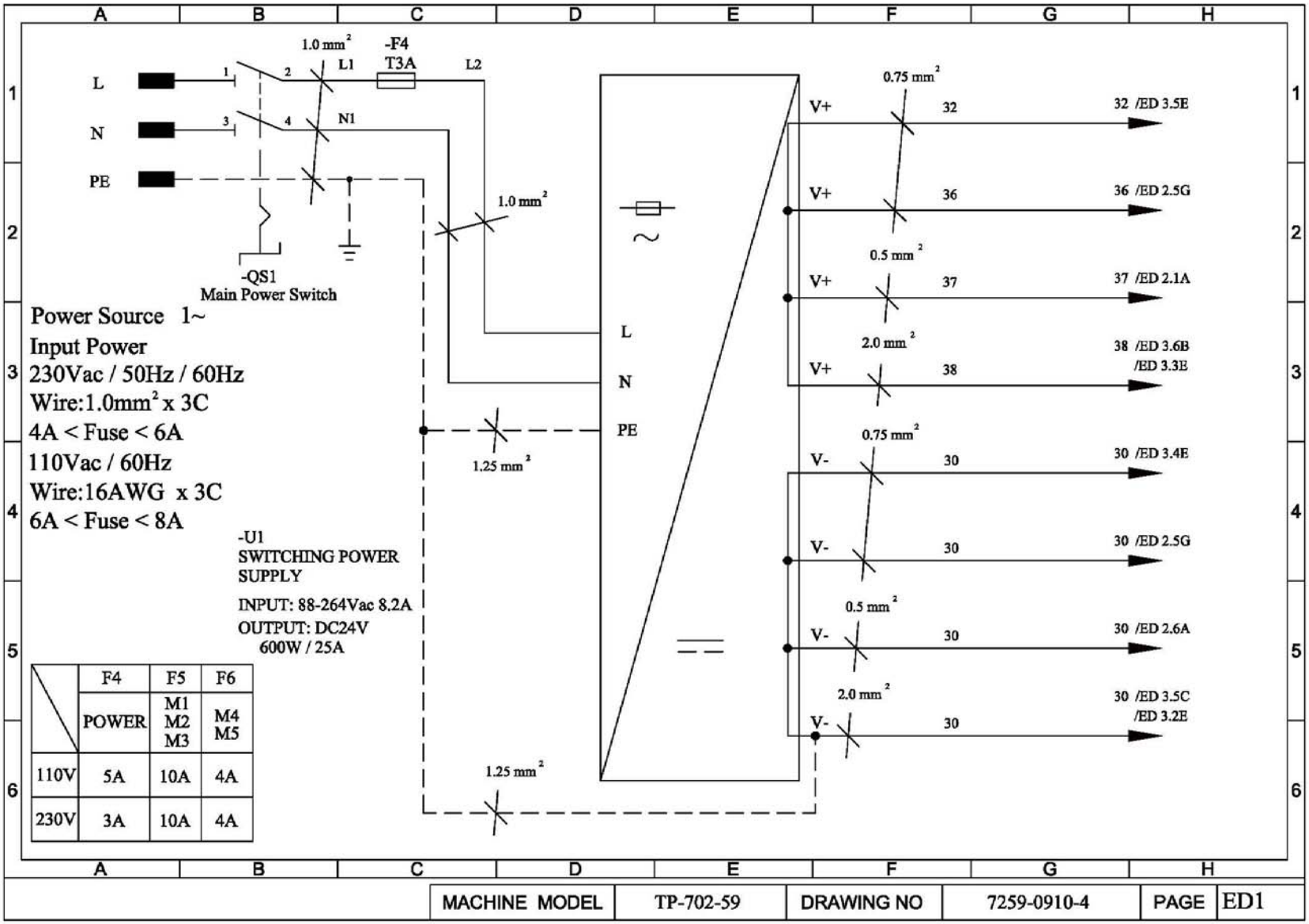

	F4	F5	F6
	POWER	M1 M2 M3	M4 M5
110V	5A	10A	4A
230V	3A	10A	4A

MACHINE MODEL	TP-702-59	DRAWING NO	7259-0910-4	PAGE	ED1

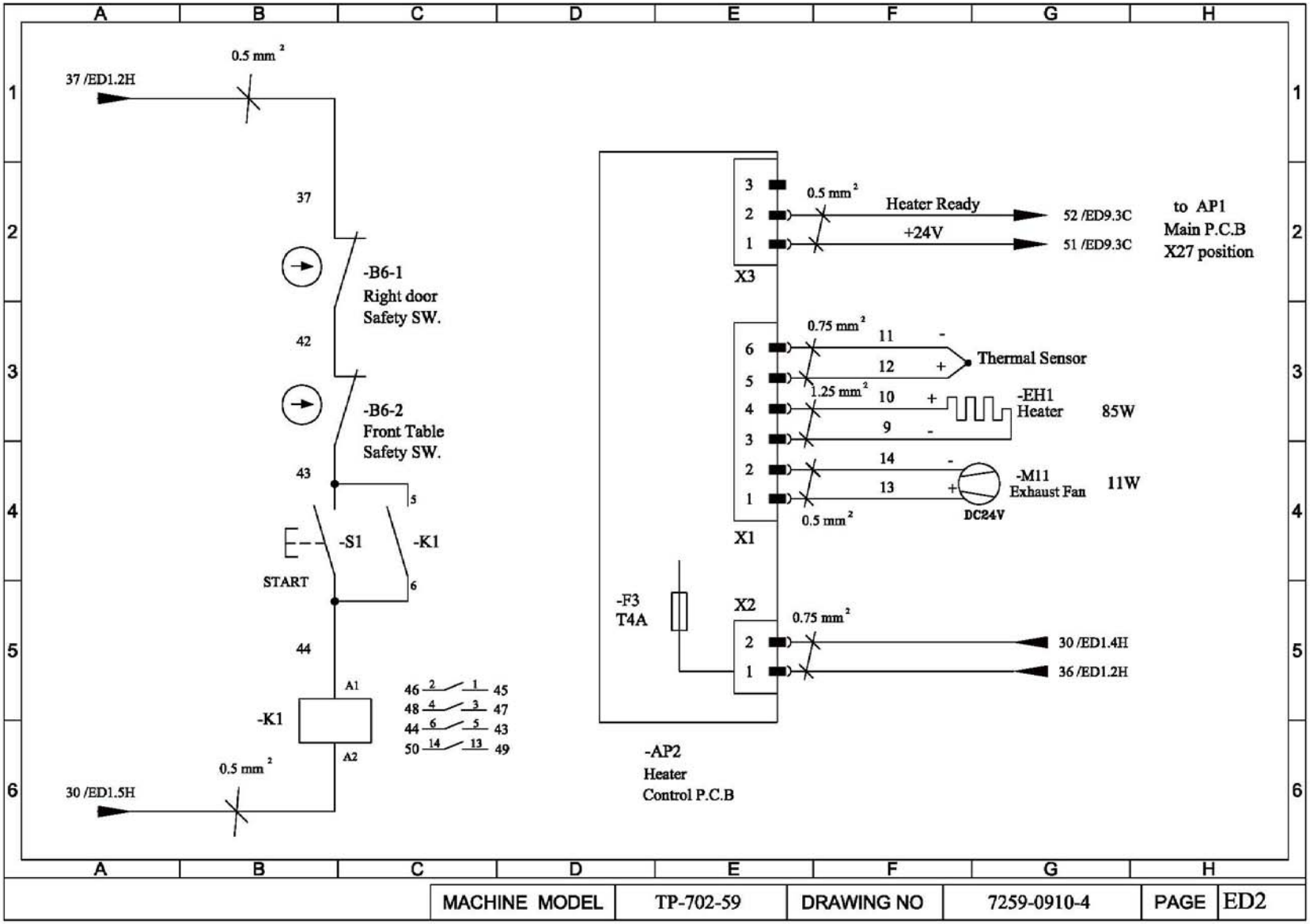
0.5 mm²
37 /ED1.2H
37
-B6-1
Right door
Safety SW.
42
-B6-2
Front Table
Safety SW.
43
5
-S1
-K1
START
6
44
A1
-K1
A2
46 2 1 45
48 4 3 47
44 6 5 43
50 14 13 49
0.5 mm²
30 /ED1.5H
3
2
1
X3
0.5 mm²
Heater Ready
+24V
52 /ED9.3C
51 /ED9.3C
to AP1
Main P.C.B
X27 position
0.75 mm²
6
5
4
3
2
1
X1
11
12
Thermal Sensor
1.25 mm²
10
9
-EH1
Heater
85W
14
13
-M11
Exhaust Fan
11W
DC24V
0.5 mm²
-F3
T4A
X2
0.75 mm²
2
1
30 /ED1.4H
36 /ED1.2H
-AP2
Heater
Control P.C.B
A B C D E F G H
1 2 3 4 5 6
MACHINE MODEL
TP-702-59
DRAWING NO
7259-0910-4
PAGE
ED2

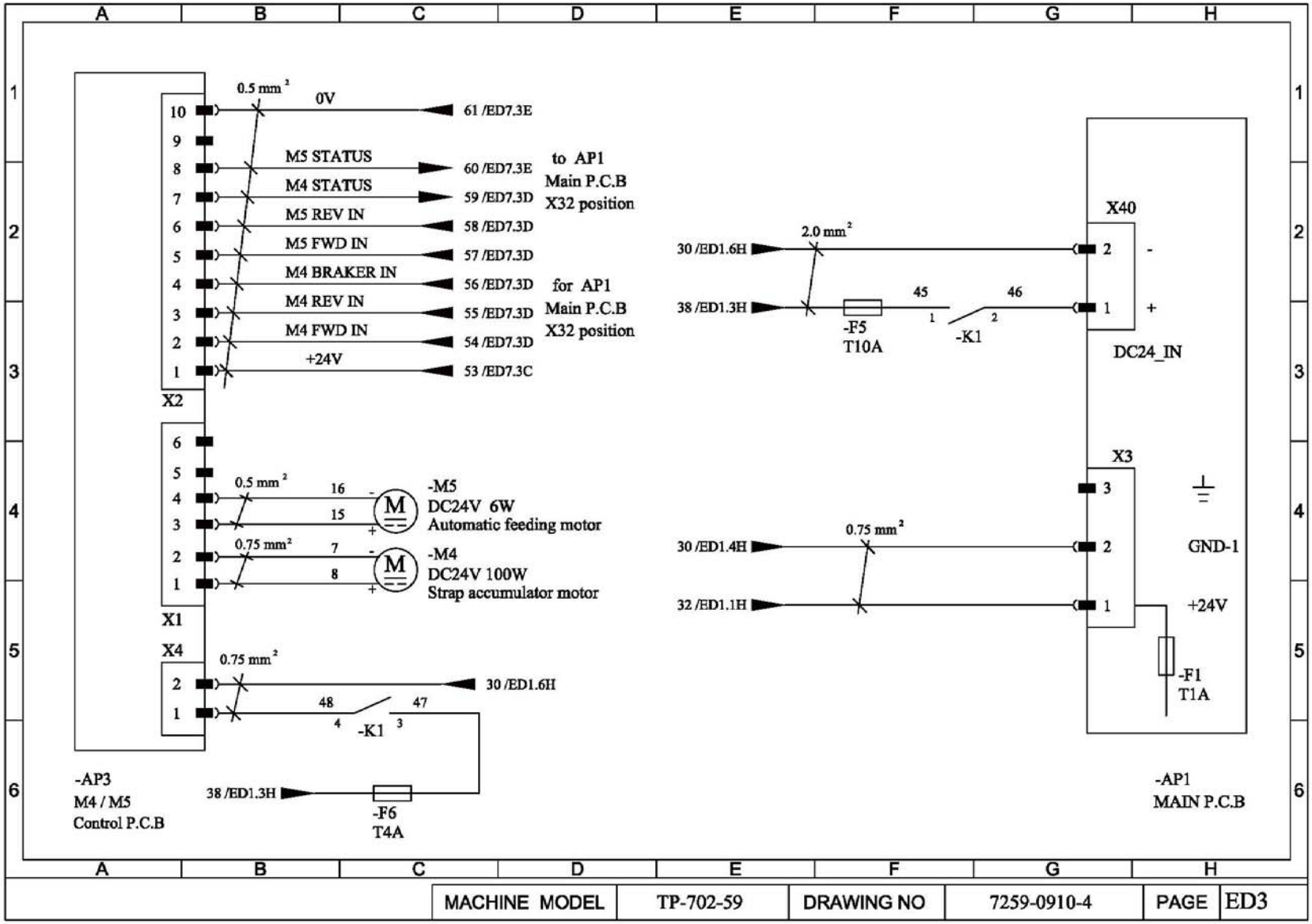
A B C D E F G H
1 2 3 4 5 6
0.5 mm²
0V
61 /ED7.3E
M5 STATUS
60 /ED7.3E
M4 STATUS
59 /ED7.3D
M5 REV IN
58 /ED7.3D
M5 FWD IN
57 /ED7.3D
M4 BRAKER IN
56 /ED7.3D
M4 REV IN
55 /ED7.3D
M4 FWD IN
54 /ED7.3D
+24V
53 /ED7.3C
to AP1
Main P.C.B
X32 position
for AP1
Main P.C.B
X32 position
X2
X1
X4
0.5 mm²
16
15
-M5
DC24V 6W
Automatic feeding motor
0.75 mm²
7
8
-M4
DC24V 100W
Strap accumulator motor
0.75 mm²
30 /ED1.6H
48
47
4
3
-K1
38 /ED1.3H
-F6
T4A
-AP3
M4 / M5
Control P.C.B
2.0 mm²
30 /ED1.6H
38 /ED1.3H
45
46
-F5
T10A
-K1
X40
2
1
-
+
DC24_IN
X3
0.75 mm²
30 /ED1.4H
32 /ED1.1H
3
2
1
GND-1
+24V
-F1
T1A
-AP1
MAIN P.C.B
MACHINE MODEL
TP-702-59
DRAWING NO
7259-0910-4
PAGE
ED3

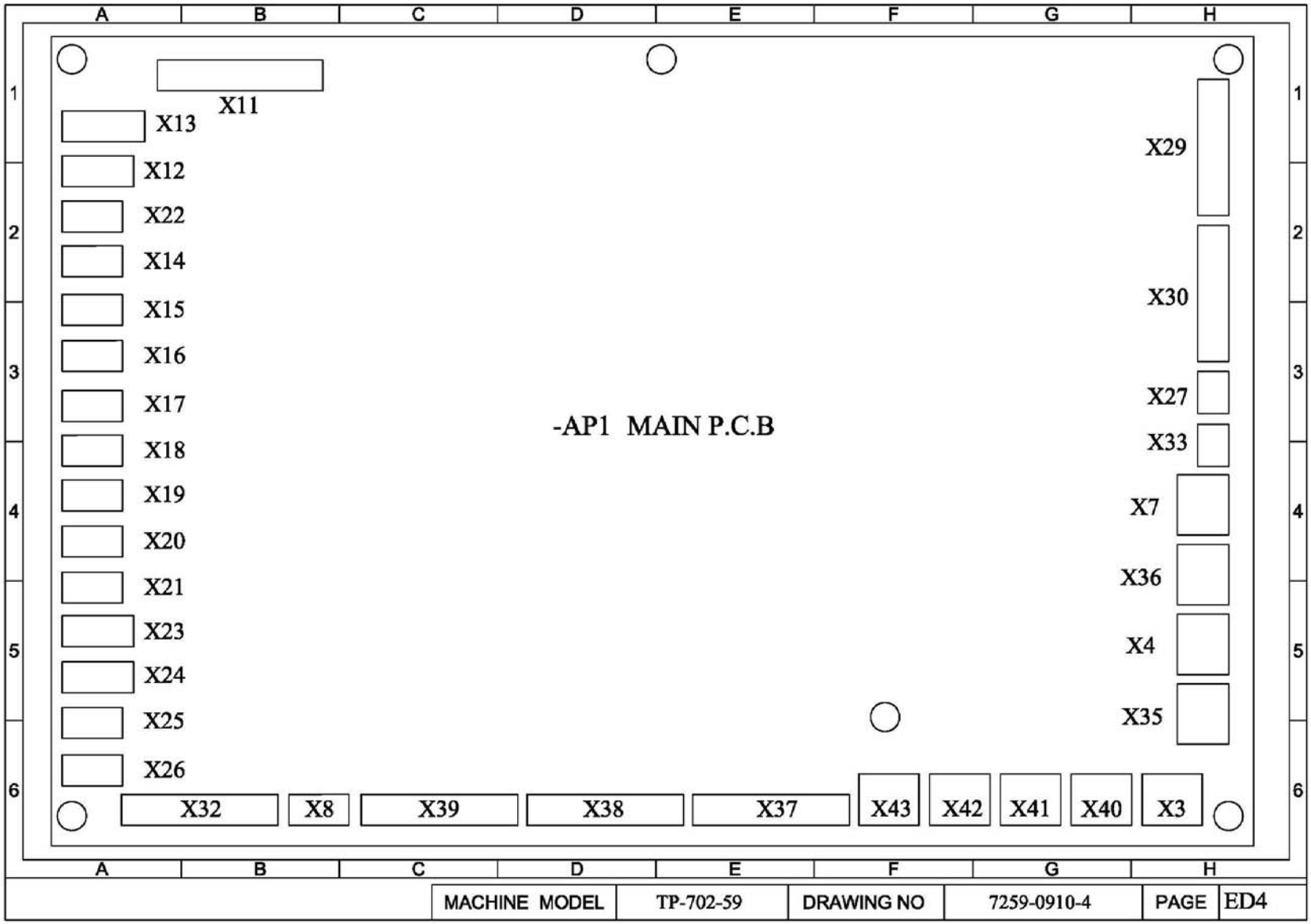
A
B
C
D
E
F
G
H
1
2
3
4
5
6
X11
X13
X12
X22
X14
X15
X16
X17
X18
X19
X20
X21
X23
X24
X25
X26
X29
X30
X27
X33
X7
X36
X4
X35
-AP1 MAIN P.C.B
X32
X8
X39
X38
X37
X43
X42
X41
X40
X3
MACHINE MODEL
TP-702-59
DRAWING NO
7259-0910-4
PAGE
ED4

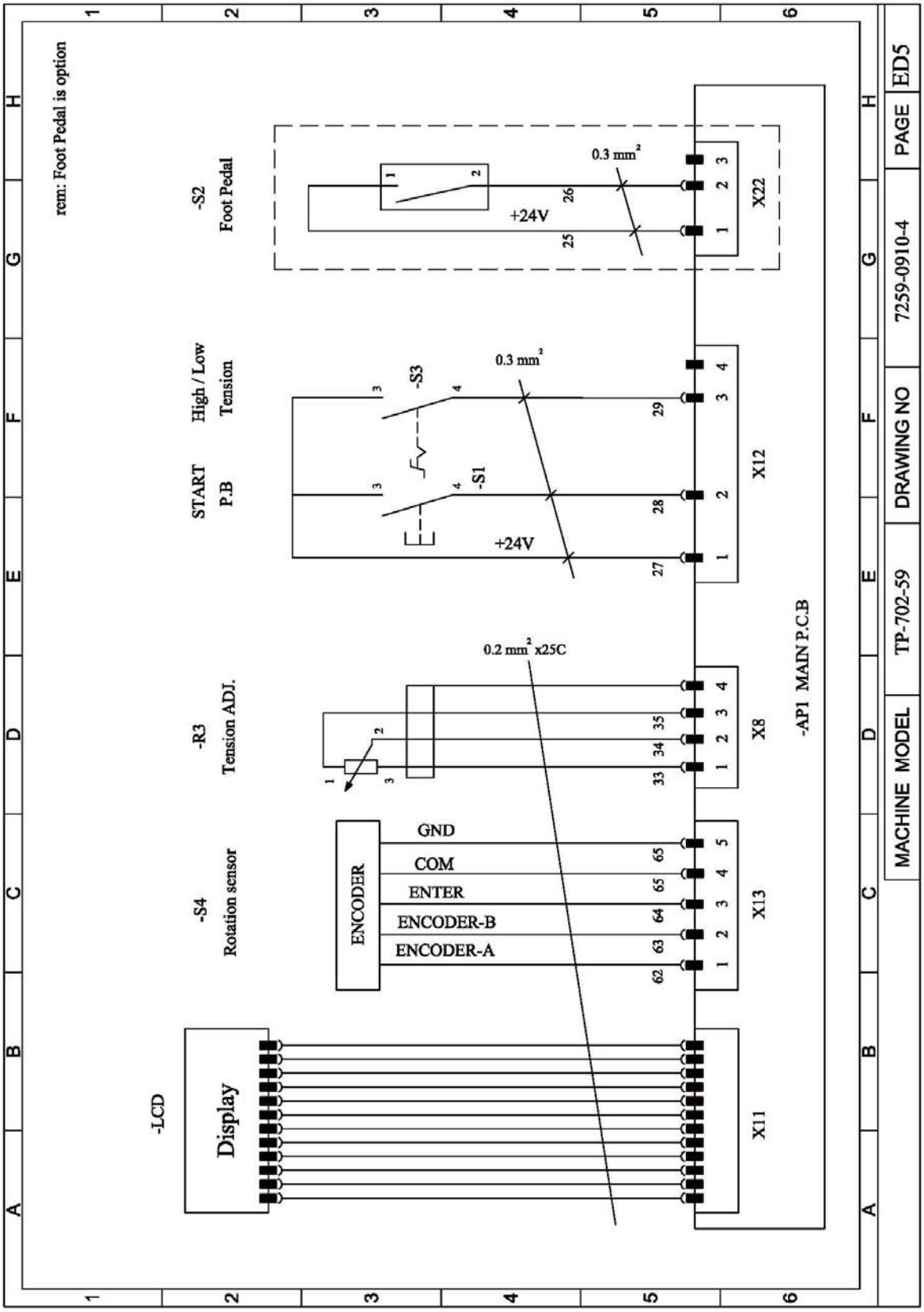
rem: Foot Pedal is option
-S2
Foot Pedal
0.3 mm²
+24V
26
25
X22
START
P.B
High / Low
Tension
-S3
-S1
0.3 mm²
+24V
29
28
27
X12
-R3
Tension ADJ.
0.2 mm² x25C
35
34
33
X8
-S4
Rotation sensor
ENCODER
GND
COM
ENTER
ENCODER-B
ENCODER-A
65
65
64
63
62
X13
-LCD
Display
X11
-AP1 MAIN P.C.B
MACHINE MODEL
TP-702-59
DRAWING NO
7259-0910-4
PAGE
ED5

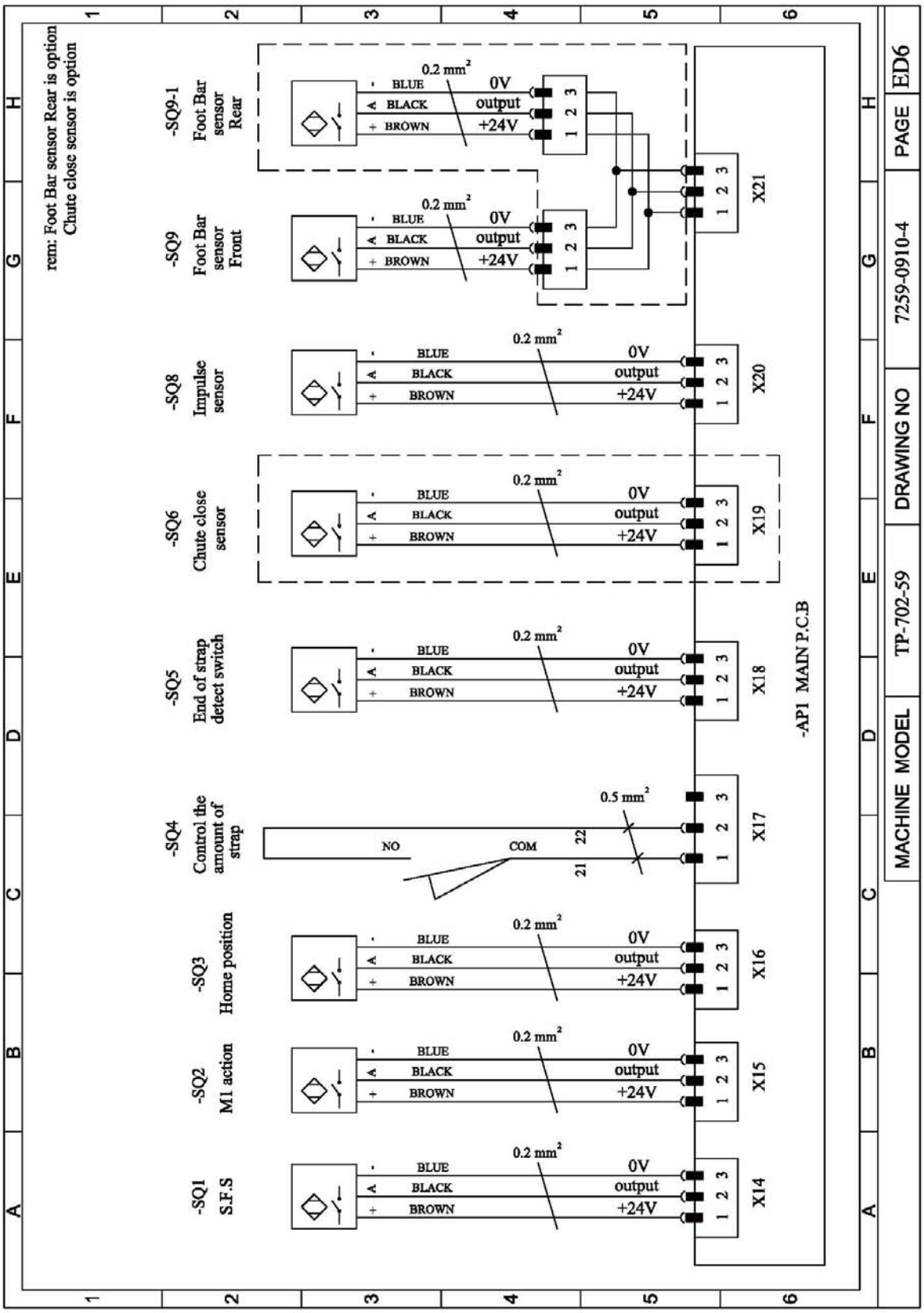
rem: Foot Bar sensor Rear is option
Chute close sensor is option
-SQ9-1 Foot Bar sensor Rear
-SQ9 Foot Bar sensor Front
-SQ8 Impulse sensor
-SQ6 Chute close sensor
-SQ5 End of strap detect switch
-SQ4 Control the amount of strap
-SQ3 Home position
-SQ2 M1 action
-SQ1 S.F.S
BLUE
BLACK
BROWN
0V
output
+24V
0.2 mm²
0.5 mm²
NO
COM
22
21
X21
X20
X19
X18
X17
X16
X15
X14
-AP1 MAIN P.C.B
MACHINE MODEL
TP-702-59
DRAWING NO
7259-0910-4
PAGE
ED6

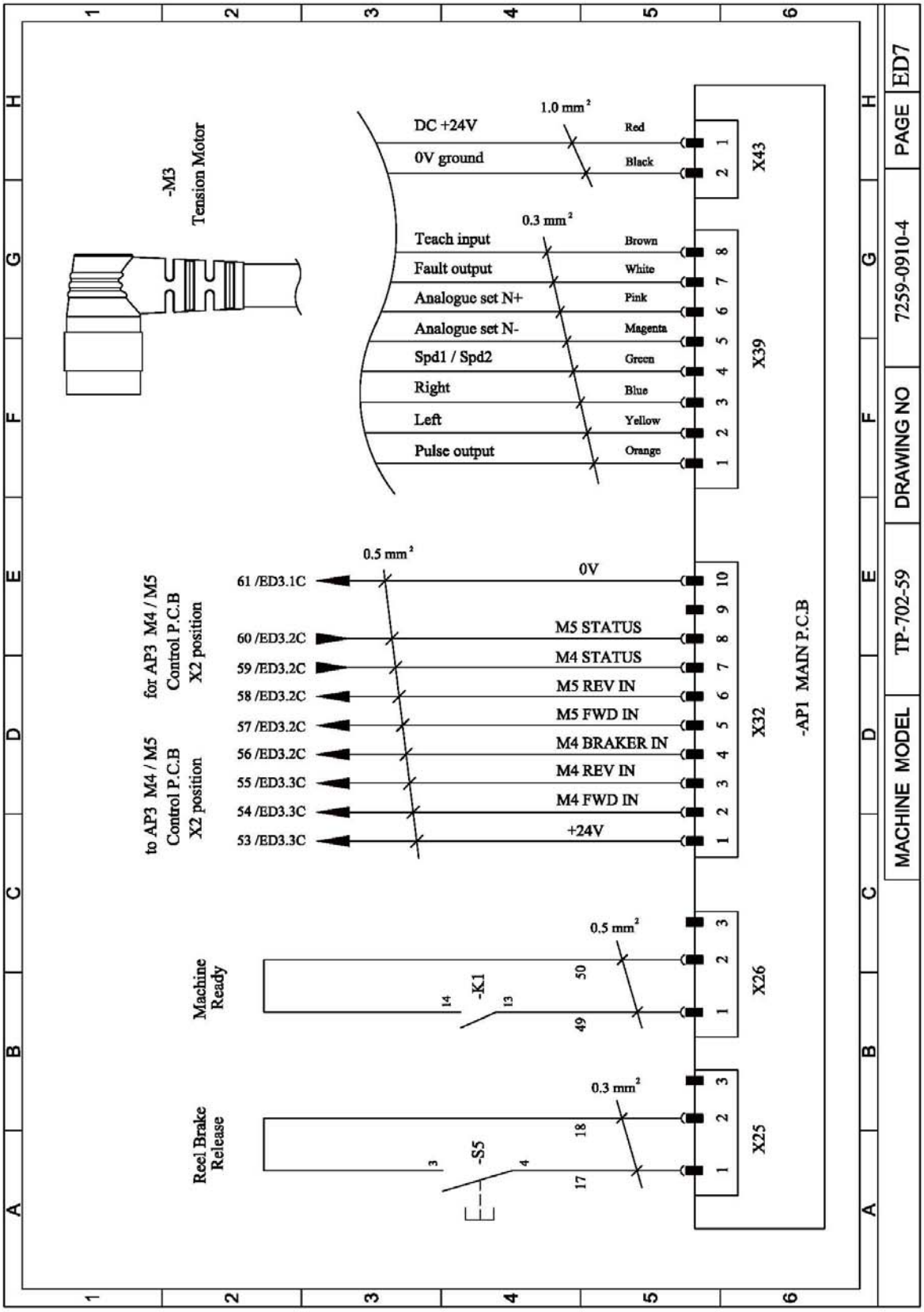
-M3
Tension Motor
DC +24V
1.0 mm²
Red
0V ground
Black
X43
Teach input
0.3 mm²
Brown
Fault output
White
Analogue set N+
Pink
Analogue set N-
Magenta
Spd1 / Spd2
Green
Right
Blue
Left
Yellow
Pulse output
Orange
X39
0.5 mm²
61 /ED3.1C
0V
60 /ED3.2C
M5 STATUS
59 /ED3.2C
M4 STATUS
58 /ED3.2C
M5 REV IN
57 /ED3.2C
M5 FWD IN
56 /ED3.2C
M4 BRAKER IN
55 /ED3.3C
M4 REV IN
54 /ED3.3C
M4 FWD IN
53 /ED3.3C
+24V
for AP3 M4 / M5 Control P.C.B X2 position
to AP3 M4 / M5 Control P.C.B X2 position
X32
-AP1 MAIN P.C.B
Machine Ready
-K1
0.5 mm²
X26
Reel Brake Release
-S5
0.3 mm²
X25
MACHINE MODEL
TP-702-59
DRAWING NO
7259-0910-4
PAGE
ED7

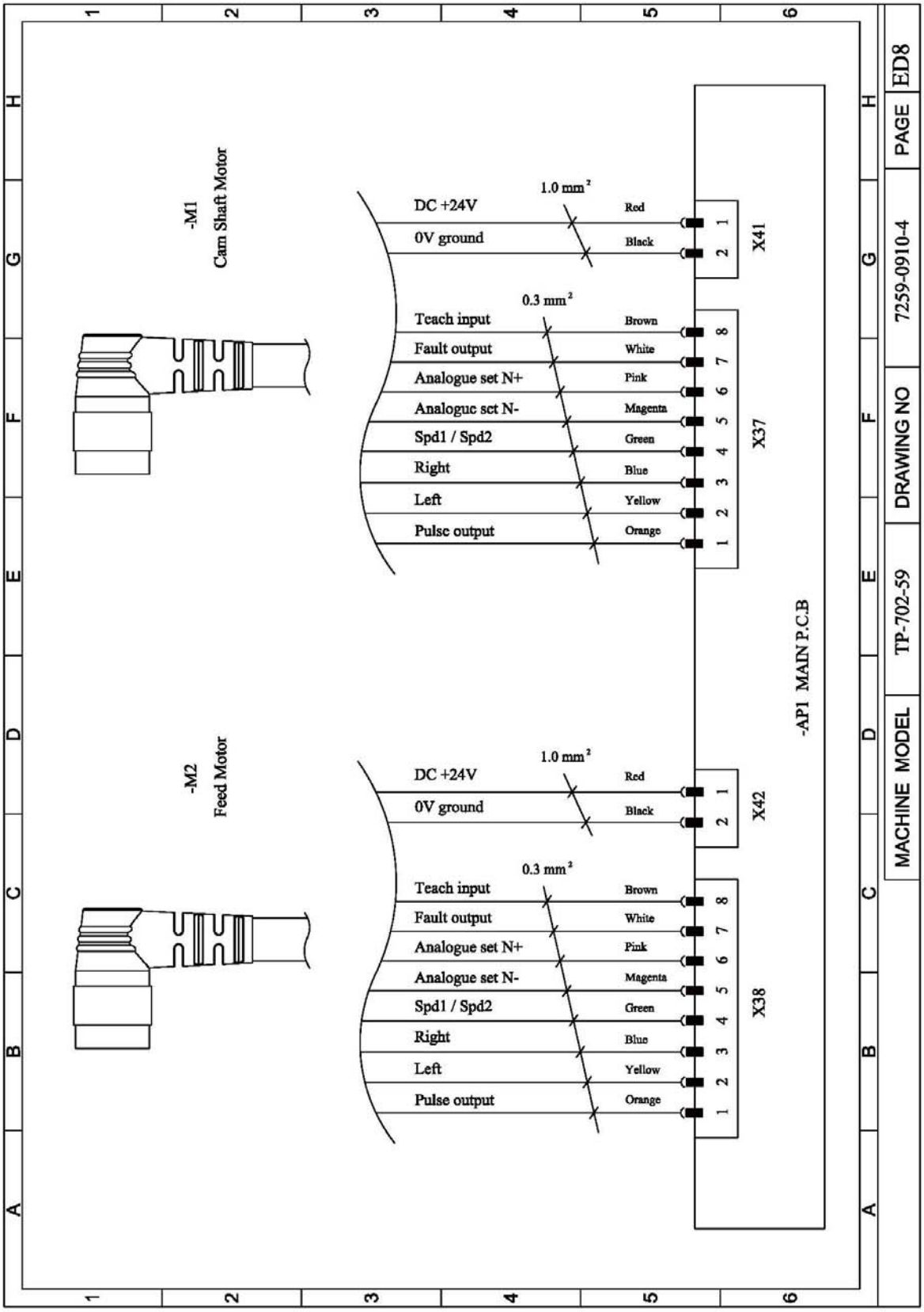
-M1
Cam Shaft Motor
DC +24V
0V ground
1.0 mm²
Red
Black
X41
0.3 mm²
Teach input
Fault output
Analogue set N+
Analogue set N-
Spd1 / Spd2
Right
Left
Pulse output
Brown
White
Pink
Magenta
Green
Blue
Yellow
Orange
X37
-AP1 MAIN P.C.B
-M2
Feed Motor
X42
X38
MACHINE MODEL
TP-702-59
DRAWING NO
7259-0910-4
PAGE
ED8

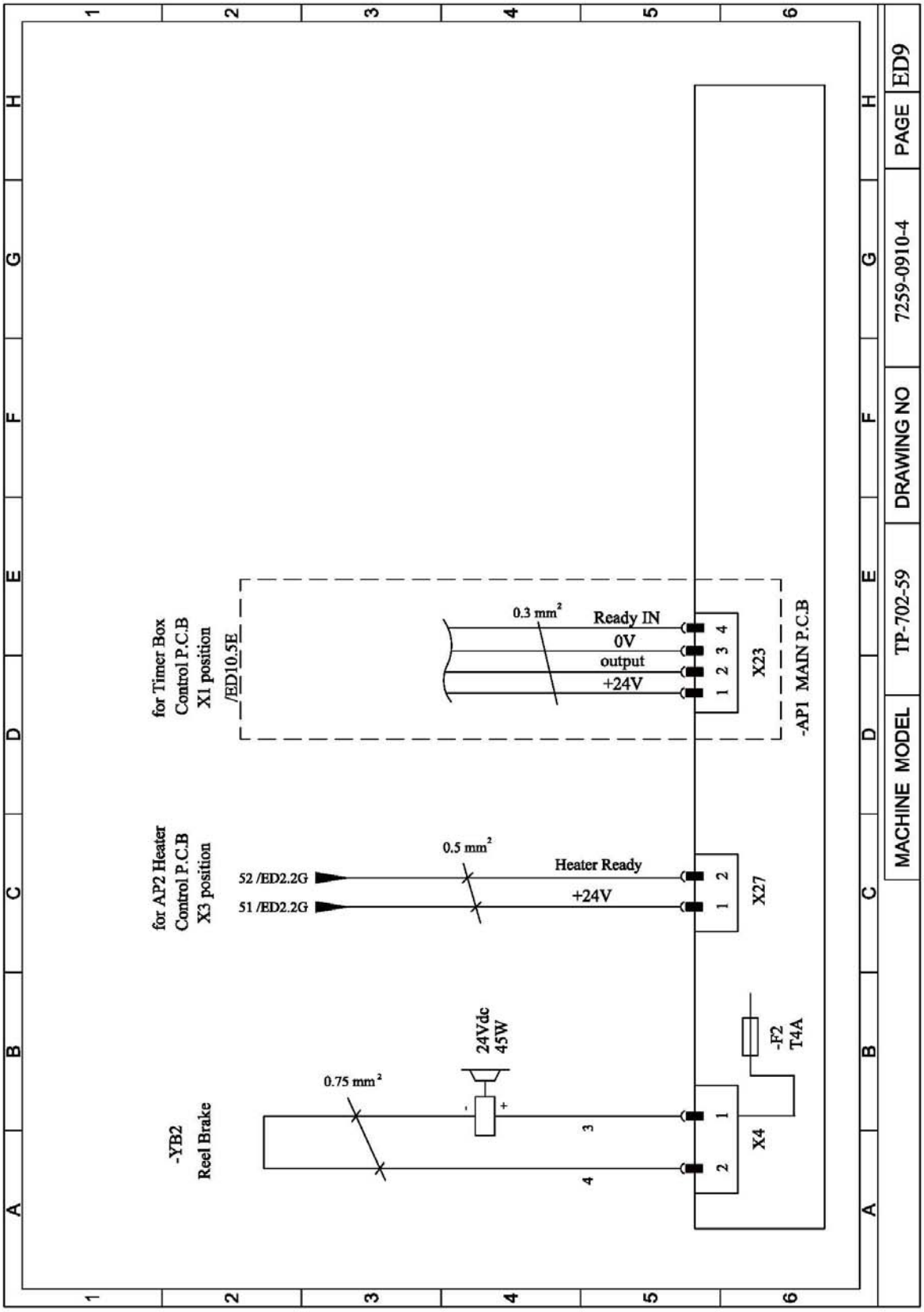
MACHINE MODEL
TP-702-59
DRAWING NO
7259-0910-4
PAGE
ED9
-AP1 MAIN P.C.B
X23
X27
X4
-F2
T4A
24Vdc
45W
-YB2
Reel Brake
for Timer Box
Control P.C.B
X1 position
/ED10.5E
for AP2 Heater
Control P.C.B
X3 position
0.3 mm²
0.5 mm²
0.75 mm²
Ready IN
0V
output
+24V
Heater Ready
+24V
52 /ED2.2G
51 /ED2.2G

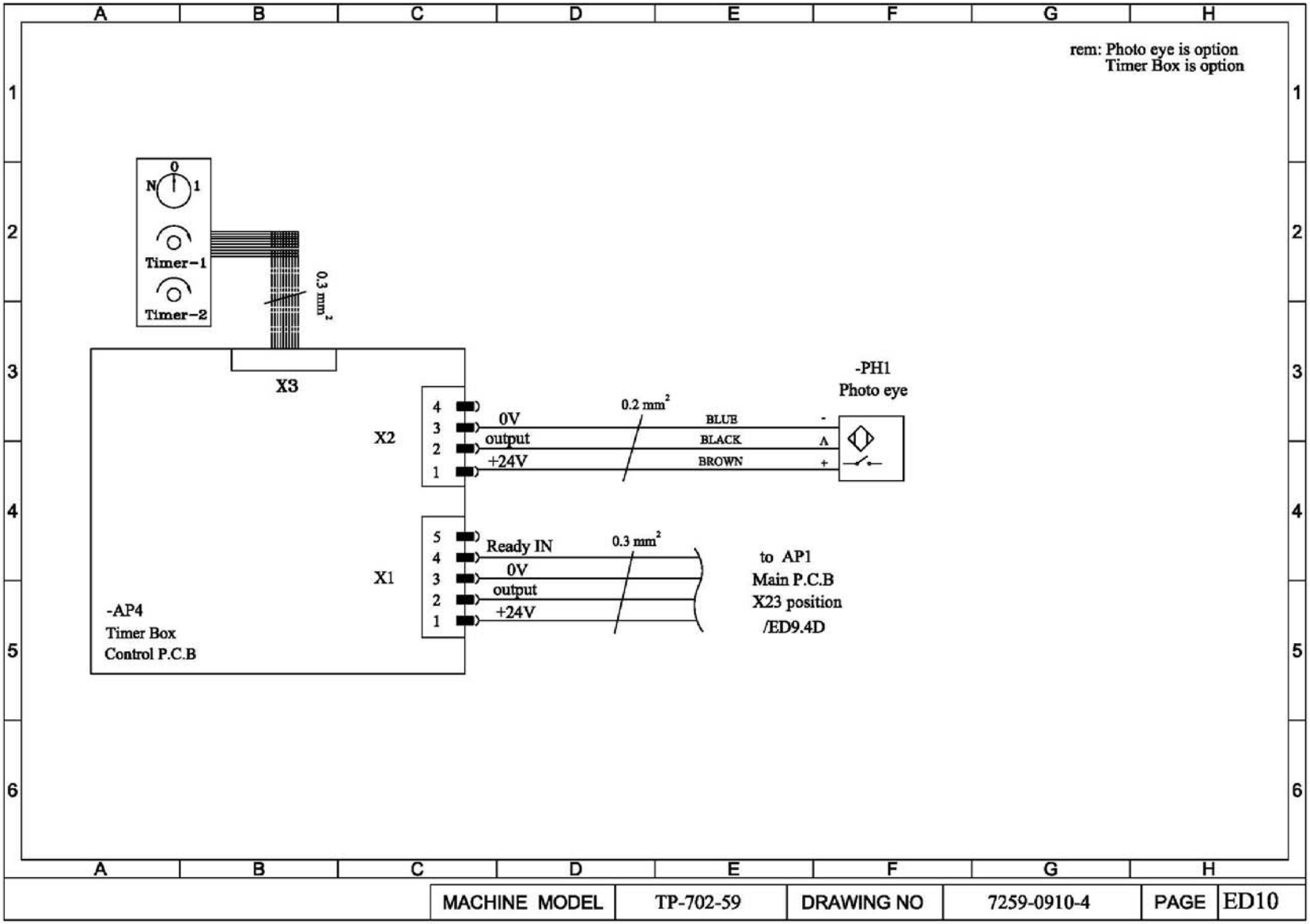
rem: Photo eye is option
Timer Box is option
0
N
1
Timer-1
Timer-2
0.3 mm²
X3
-PH1
Photo eye
X2
4
3
2
1
0V
output
+24V
0.2 mm²
BLUE
BLACK
BROWN
-
A
+
X1
5
4
3
2
1
Ready IN
0V
output
+24V
0.3 mm²
to AP1
Main P.C.B
X23 position
/ED9.4D
-AP4
Timer Box
Control P.C.B
MACHINE MODEL
TP-702-59
DRAWING NO
7259-0910-4
PAGE
ED10

PART III

1 STRAPPING HEAD UNIT M7-1-900062 M7-1-900072

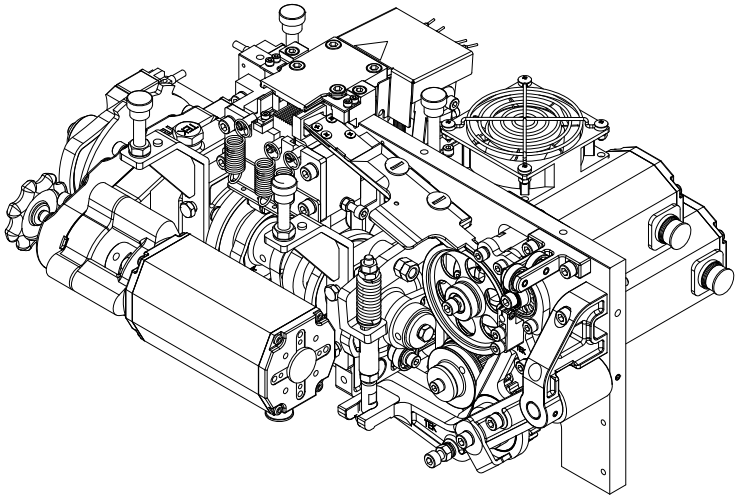

1

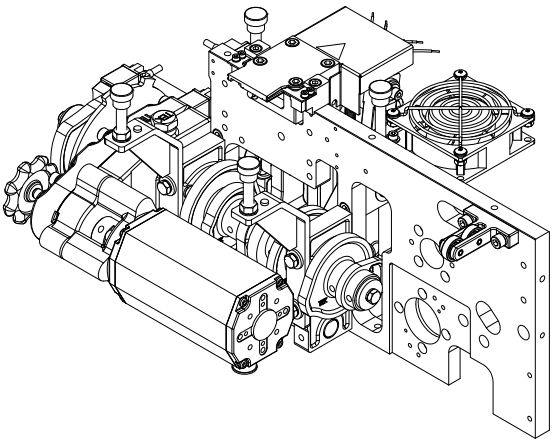

3

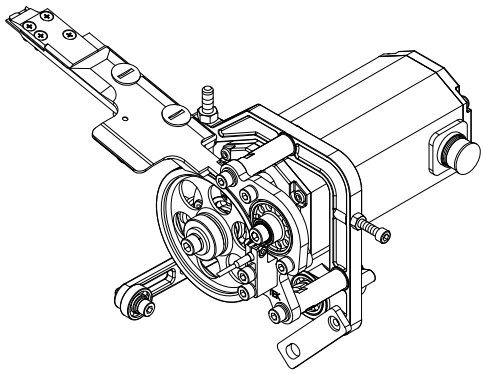

2

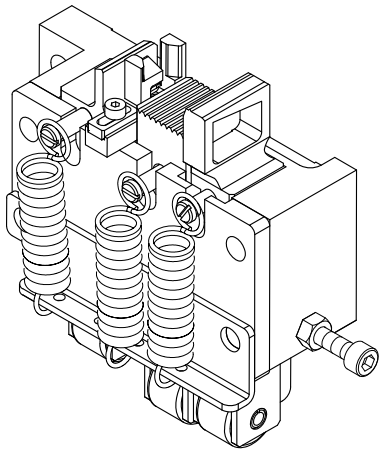

4

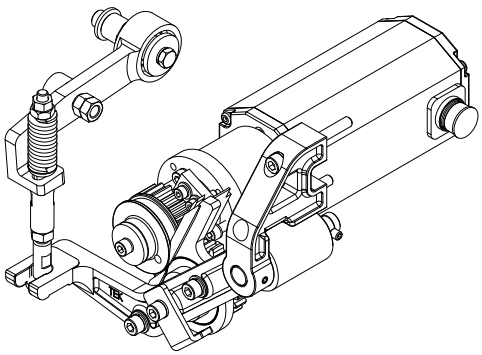

1 STRAPPING HEAD UNIT M7-1-900062 M7-1-900072

REF. NO.	PART NO.	DESCRIPTION	Q'TY	REMARKS
	M7-1-900062	Strapping Head Unit (For 5-6mm)	1	
	M7-1-900072	Strapping Head Unit (For 9mm)	1	
1	M7-1-100022	Cam Group (For 5-6mm)	1	SEE PAGE C3
	M7-1-100040	Cam Group (For 9mm)	1	
2	M7-1-200000	Bar Guide Group	1	SEE PAGE C19
3	M7-1-300002	Feed Group (For 5-6mm)	1	SEE PAGE C27
	M7-1-300012	Feed Group (For 9mm)	1	
4	M7-1-400002	Tension Group (For 5-6mm)	1	SEE PAGE C37
	M7-1-400012	Tension Group (For 9mm)	1	

1-1 CAM GROUP M7-1-100022 M7-1-100040

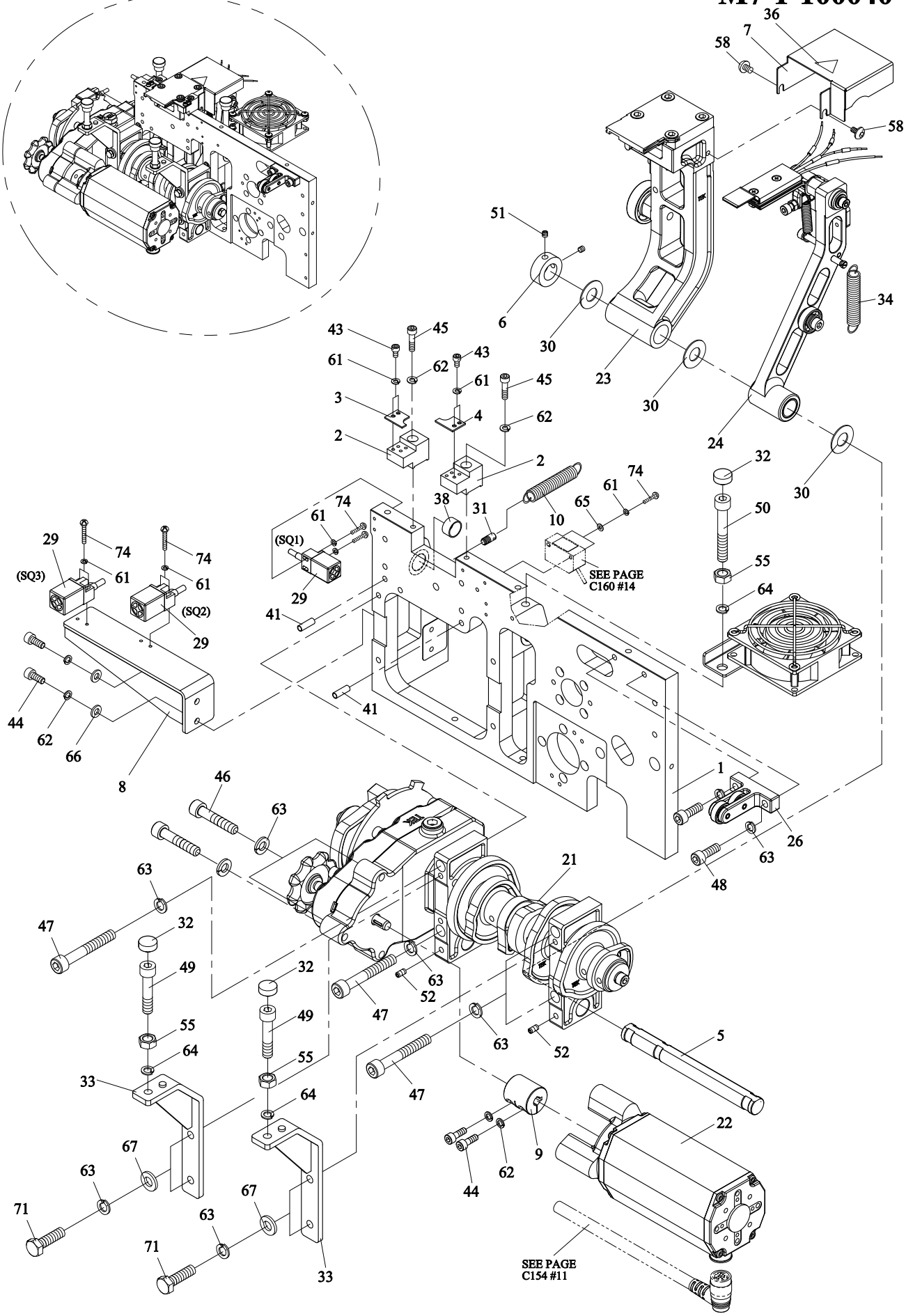

1-1 CAM GROUP M7-1-100022 M7-1-100040

REF. NO.	PART NO.	DESCRIPTION	Q'TY	REMARKS
	M7-1-100022	Cam Group (For 5-6mm)	1	
	M7-1-100040	Cam Group (For 9mm)	1	
1	M7-1-101100	Strapping Head Frame	1	
2	M7-1-101200	Guide	2	
3	M7-1-101300	Ejector Plate (L)	1	
4	M7-1-101400	Ejector Plate (R)	1	
5	M7-1-101500	Shaft	1	
6	M7-1-101600	Collar	1	
7	M7-1-101700	Cover	1	
8	M7-1-101800	Sensor Base	1	
9	M7-1-101900	Coupling	1	
10	M7-1-102000	Spring	1	
21	M7-1-110001	Gear Box and Cam Ass'y	1	SEE PAGE C7
22	M7-1-120000	M1 Motor Ass'y	1	SEE PAGE C9
23	M7-1-130002	Slide Table Frame Ass'y (For 5-6mm)	1	SEE PAGE C11
	M7-1-130030	Slide Table Frame Ass'y (For 9mm)	1	
24	M7-1-140000	Heater Arm Ass'y	1	SEE PAGE C13
25	M7-1-150000	Exhaust Fan Ass'y	1	SEE PAGE C15
26	T7-1-16000	Block Ass'y	1	SEE PAGE C17
29	MV-6-20220	Proximity Sensor (X14, X15, X16)(SQ1, SQ2, SQ3)	3	SEE PAGE C153
30	H42-1227	Washer	3	
31	TA-089	Spring Hook	1	
32	T7-1-10330	Bumper	4	
33	M7-1-102500	Bumper Bracket	2	
34	T7-1-64130	Return Spring	1	
36	LA-40002	Label	1	
38	MB1515	Metal Bushing, 1515	1	
41	SP0514	Spring Pin, 5×14	2	
43	HBS0308N	HBS, M3×8 (N)	4	
44	HBS0516N	HBS, M5×16 (N)	4	
45	HBS0525HN	HBS, M5×25 (H)(N)	2	
46	HBS0640HN	HBS, M6×40 (H)(N)	3	
47	HBS0645HN	HBS, M6×45 (H)(N)	4	
48	HBS0620N	HBS, M6×20 (N)	2	
49	HBS0840HN	HBS, M8×40 (H)(N)	2	
50	HBS0865HN	HBS, M8×65 (H)(N)	2	
51	HSS0506GN	HSS, M5×6 (G)(N)	2	
52	HSS0610GN	HSS, M6×10 (G)(N)	2	

1-1 CAM GROUP M7-1-100022 M7-1-100040

REF. NO.	PART NO.	DESCRIPTION	Q'TY	REMARKS
55	HN08	HN, M8	4	
58	THS0508N	THS, M5×8 (N)	2	
61	SW03	SW, M3	10	
		SW, M3 (Option)	12	
62	SW05	SW, M5	6	
63	SW06	SW, M6	13	
64	SW08	SW, M8	4	
65	PW03	PW, M3 (Option)	2	
66	PW05	PW, M5	2	
67	PW06C	PW, M6 (C)	4	
71	HB0620	HB, M6×20	4	
74	PMS0320	PMS, M3×20	6	
		PMS, M3×20 (Option)	8	

1-1-1 GEAR BOX AND CAM ASS'Y M7-1-110001

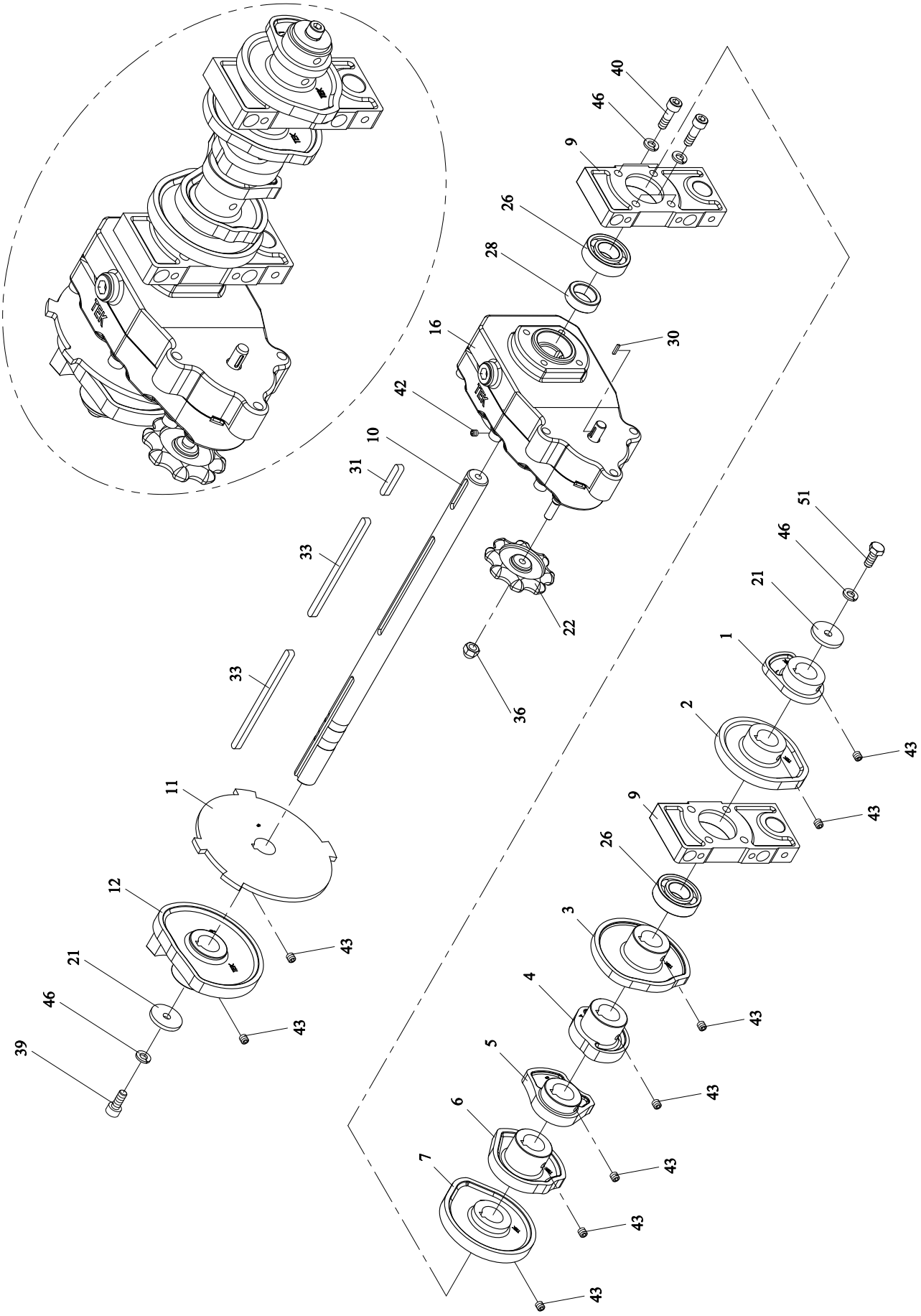

1-1-1 GEAR BOX AND CAM ASS'Y M7-1-110001

REF. NO.	PART NO.	DESCRIPTION	Q'TY	REMARKS
1	M7-1-111100	Retracting Cam	1	
2	M7-1-111200	Tension Cam	1	
3	M7-1-111300	Heater Cam	1	
4	M7-1-111400	Front Bar Cam	1	
5	M7-1-111500	Press Bar Cam	1	
6	M7-1-111600	Rear Bar Cam	1	
7	M7-1-111701	Slide Table Cam	1	
9	M7-1-111900	Support	2	
10	M7-1-112001	Cam Shaft	1	
11	M7-1-112101	Position Cam	1	
12	M7-1-112201	Arch Cam	1	
16	M7-1-110100	Gear Box	1	
21	TB-223	Washer	2	
22	T7-1-11240	Handle	1	
26	BR6003ZZ	Bearing, 6003ZZ	2	
28	MCO-A-1700820	Spacer	1	
30	KYA020210	Key, 2×2×10	1	
31	KYA050530	Key, 5×5×30	1	
33	KYA0505101	Key, 5×5×101	2	
36	CAP06	CAP, M6	1	
39	HBS0616N	HBS, M6×16 (N)	1	
40	HBS0625N	HBS, M6×25 (N)	4	
42	HSS0505GN	HSS, M5×5 (G)(N)	1	
43	HSS0606GN	HSS, M6×6 (G)(N)	9	
46	SW06	SW, M6	6	
51	HB0616N	HB, M6×16 (N)	1	

1-1-2 M1 MOTOR ASS'Y M7-1-120000

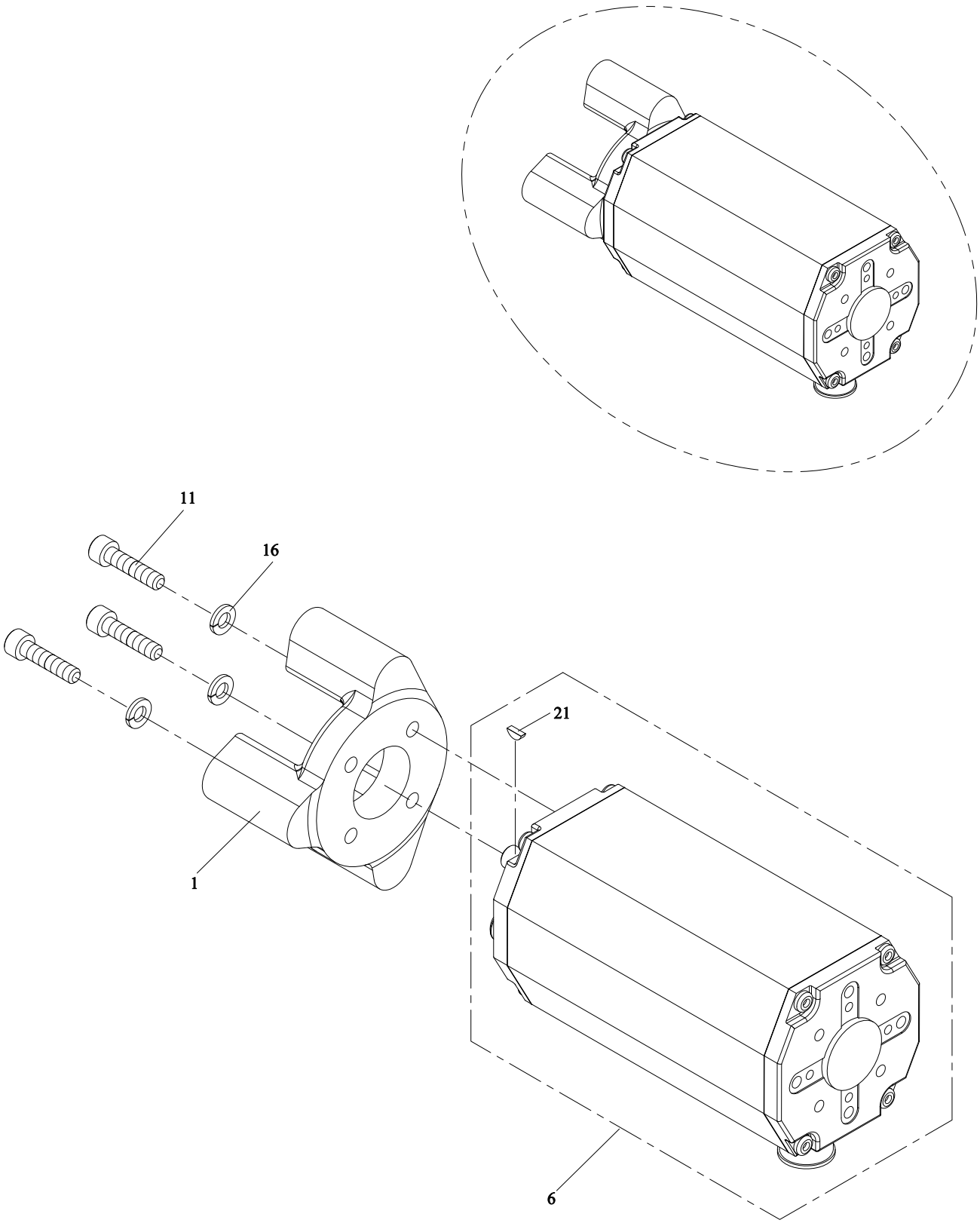

1-1-2 M1 MOTOR ASS'Y M7-1-120000

REF. NO.	PART NO.	DESCRIPTION	Q'TY	REMARKS
1	M7-1-121100	Gear Box Support	1	
6	M7-1-221100	M1 Motor	1	
11	HBS0520N	HBS, M5×20 (N)	4	
16	SW05	SW, M5	4	
21	KYC0210	Key, 2×10	1	

1-1-3 SLIDE TABLE FRAME ASS'Y M7-1-130002 M7-1-130030

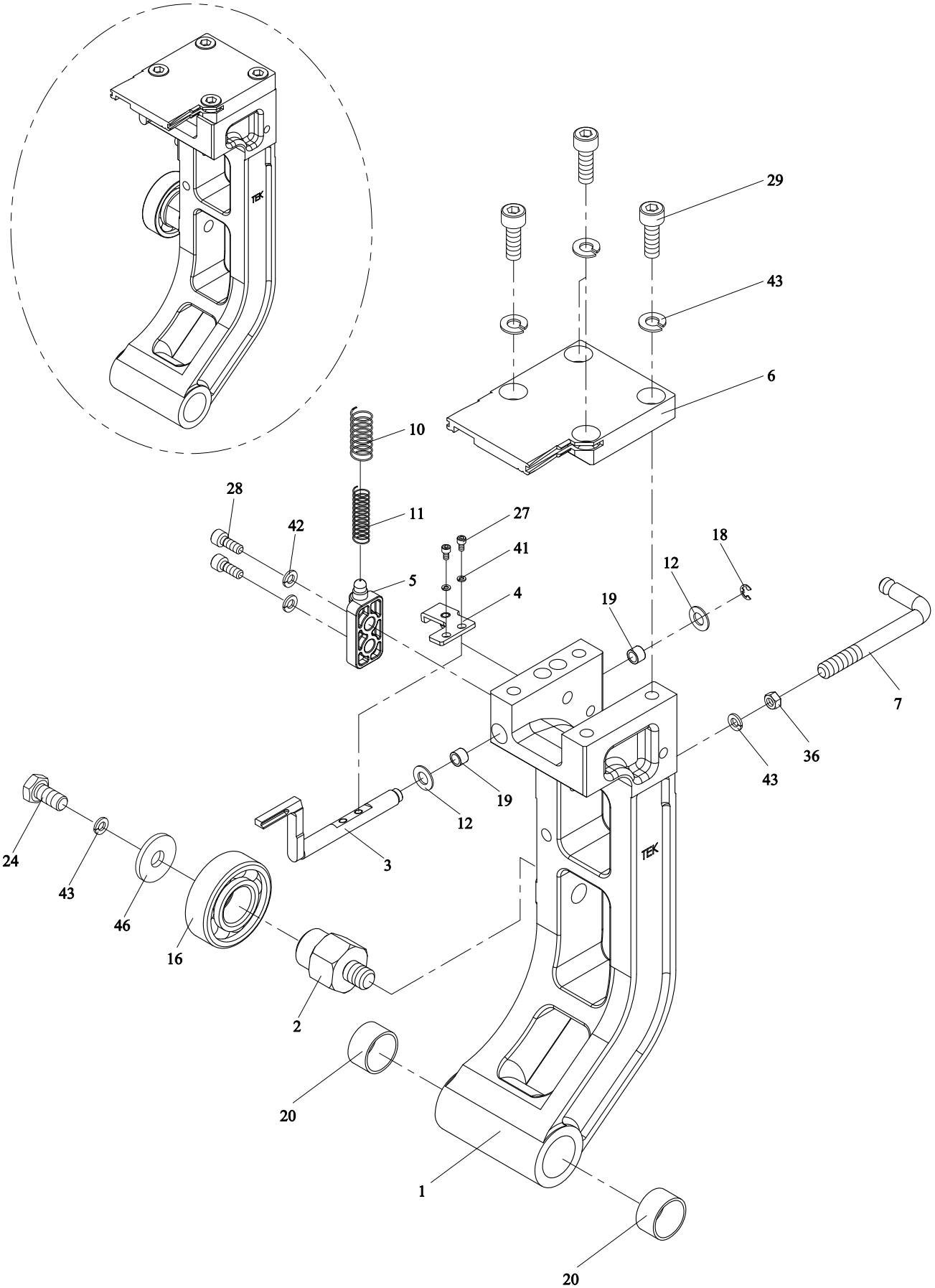

1-1-3 SLIDE TABLE FRAME ASS'Y M7-1-130002 M7-1-130030

REF. NO.	PART NO.	DESCRIPTION	Q'TY	REMARKS
	M7-1-130002	Slide Table Frame Ass'y (For 5-6mm)	1	
	M7-1-130030	Slide Table Frame Ass'y (For 9mm)	1	
1	M7-1-131102	Slide Table Frame	1	
2	M7-1-131200	Shaft	1	
3	M7-1-131301	Switch Lever	1	
4	M7-1-131400	Sensor Plate	1	
5	M7-1-131500	Spring Base	1	
6	M7-1-131600	Slide Table	1	
	M7-1-131600S	Slide Table (Stainless Steel Model)(Option)	1	
7	M7-1-131700	Spring Hook	1	
10	MSP-C-0607700	Spring (For 5-6mm)	1	
	MSP-C-0808100	Spring (For 9mm)	1	
11	T7-1-10140	Spring	1	
12	MWA-A-0610020S	Washer (SUS)	2	
16	BR6202ZZ	Bearing, 6202ZZ	1	
18	ER04	Snap Ring, E-4	1	
19	MB0608	Metal Bushing, 0608	2	
20	MB1515	Metal Bushing, 1515	2	
24	HB0612	HB, M6×12	1	
27	HBS0306N	HBS, M3×6 (N)	2	
28	HBS0512N	HBS, M5×12 (N)	2	
29	HBS0616N	HBS, M6×16 (N)	4	
36	HN06	HN, M6	1	
41	SW03	SW, M3	2	
42	SW05	SW, M5	2	
43	SW06	SW, M6	6	
46	PW06C	PW, M6 (C)	1	

1-1-4 HEATER ARM ASS'Y M7-1-140000

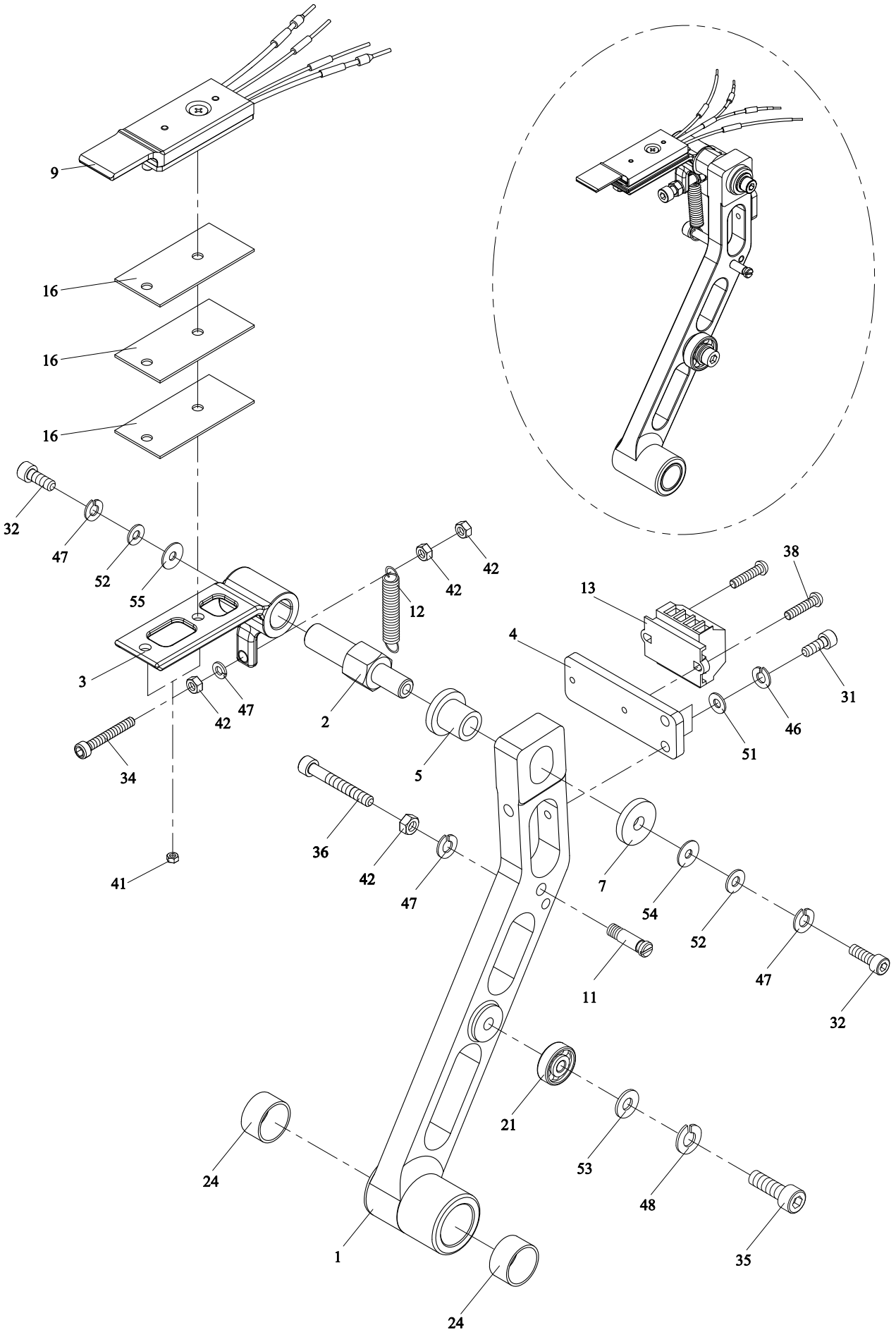

1-1-4 HEATER ARM ASS'Y M7-1-140000

REF. NO.	PART NO.	DESCRIPTION	Q'TY	REMARKS
1	M7-1-141100	Heater Crank	1	
2	M7-1-141200	Heater Shaft	1	
	M7-1-141200S	Heater Shaft (Stainless Steel Model)(Option)	1	
3	M7-1-141300	Heater Bracket	1	
	M7-1-141300S	Heater Bracket (Stainless Steel Model)(Option)	1	
4	M7-1-141400	Terminal Bracket	1	
5	M7-1-141500	Isolator	1	
7	WA-030501	Washer (φ 5.5× φ 18 t=3)	1	
9	M7-1-140101	Heater Set	1	
11	TA-073	Spring Hook	1	
12	TB-115	Spring	1	
13	T5-1-12451	Heater Terminal	1	
16	T7-1-12412	Heater-Insulation	3	
21	BR636ZZ	Bearing, 636ZZ	1	
24	MB1515	Metal Bushing, 1515	2	
31	HBS0412N	HBS, M4×12 (N)	2	
32	HBS0516N	HBS, M5×16 (N)	2	
34	HBS0530N	HBS, M5×30 (N)	1	
35	HBS0620N	HBS, M6×20 (N)	1	
36	HBS0540HN	HBS, M5×40 (H)(N)	1	
38	PMS0310	PMS, M3×10	2	
41	HN04S	HN, M4 (SUS)	2	
42	HN05	HN, M5	4	
47	SW05	SW, M5	4	
48	SW06	SW, M6	1	
51	PW04	PW, M4	2	
52	PW05	PW, M5	2	
53	PW06A	PW, M6 (A)	1	
54	PW06C	PW, M6 (C)	1	
55	PW06CS	PW, M6 (C)(SUS)	1	

1-1-5 EXHAUST FAN ASS'Y M7-1-150000

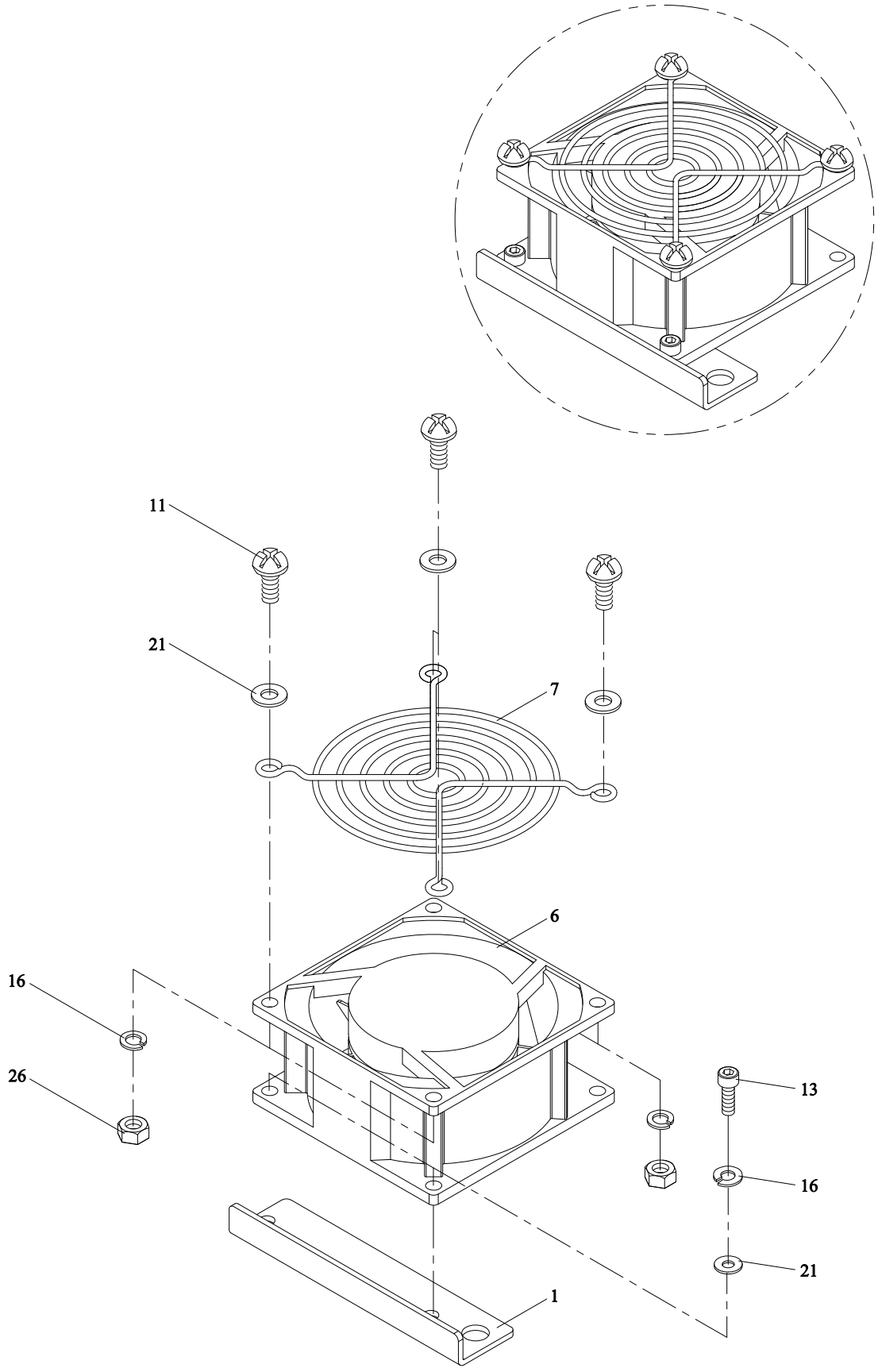

1-1-5 EXHAUST FAN ASS'Y M7-1-150000

REF. NO.	PART NO.	DESCRIPTION	Q'TY	REMARKS
1	M7-1-151100	Fan Bracket	1	
6	T5-1-12370	Fan	1	
7	T7-6-10930	Fan Cover	1	
11	TMS0412N	TMS, M4×12 (N)	4	
13	HBS0410N	HBS, M4×10 (N)	2	
16	SW04	SW, M4	6	
21	PW04	PW, M4	6	
26	HN04	HN, M4	4	

1-1-6 BLOCK ASS'Y T7-1-16000

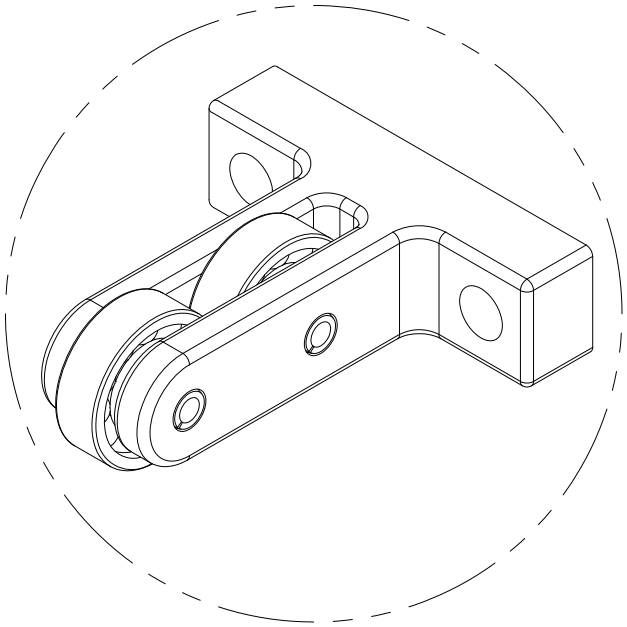

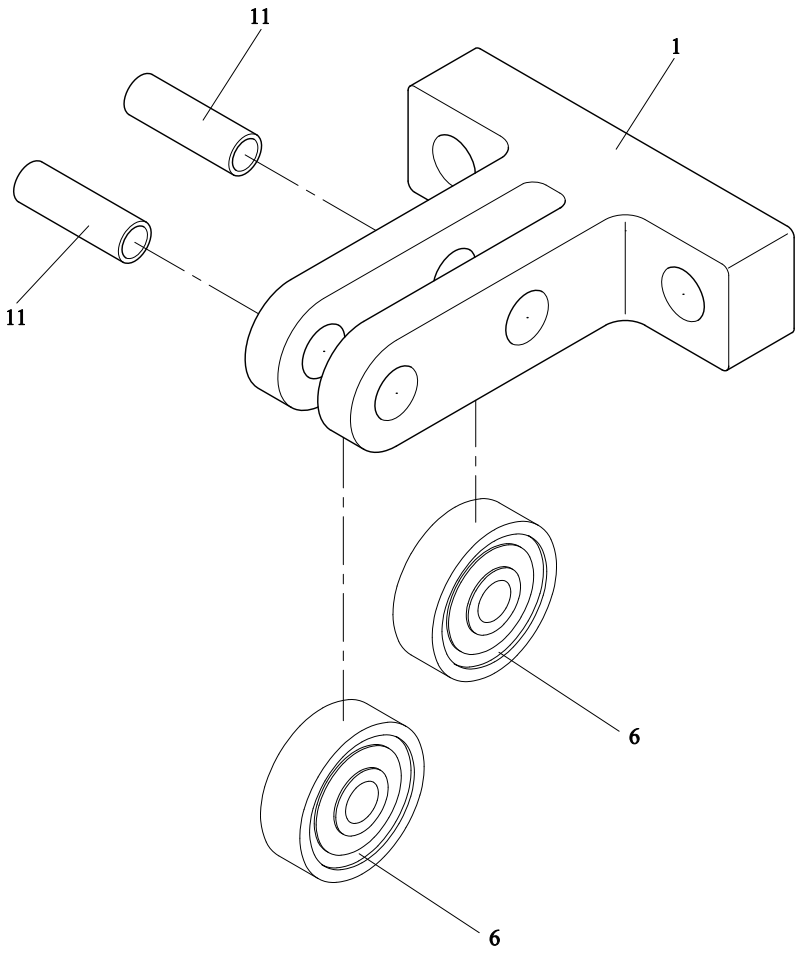

1-1-6 BLOCK ASS'Y T7-1-16000

REF. NO.	PART NO.	DESCRIPTION	Q'TY	REMARKS
1	T7-1-10890	Block	1	
6	BR635ZZ	Bearing, 635ZZ	2	
11	SP0516	Spring Pin, 5×16	2	

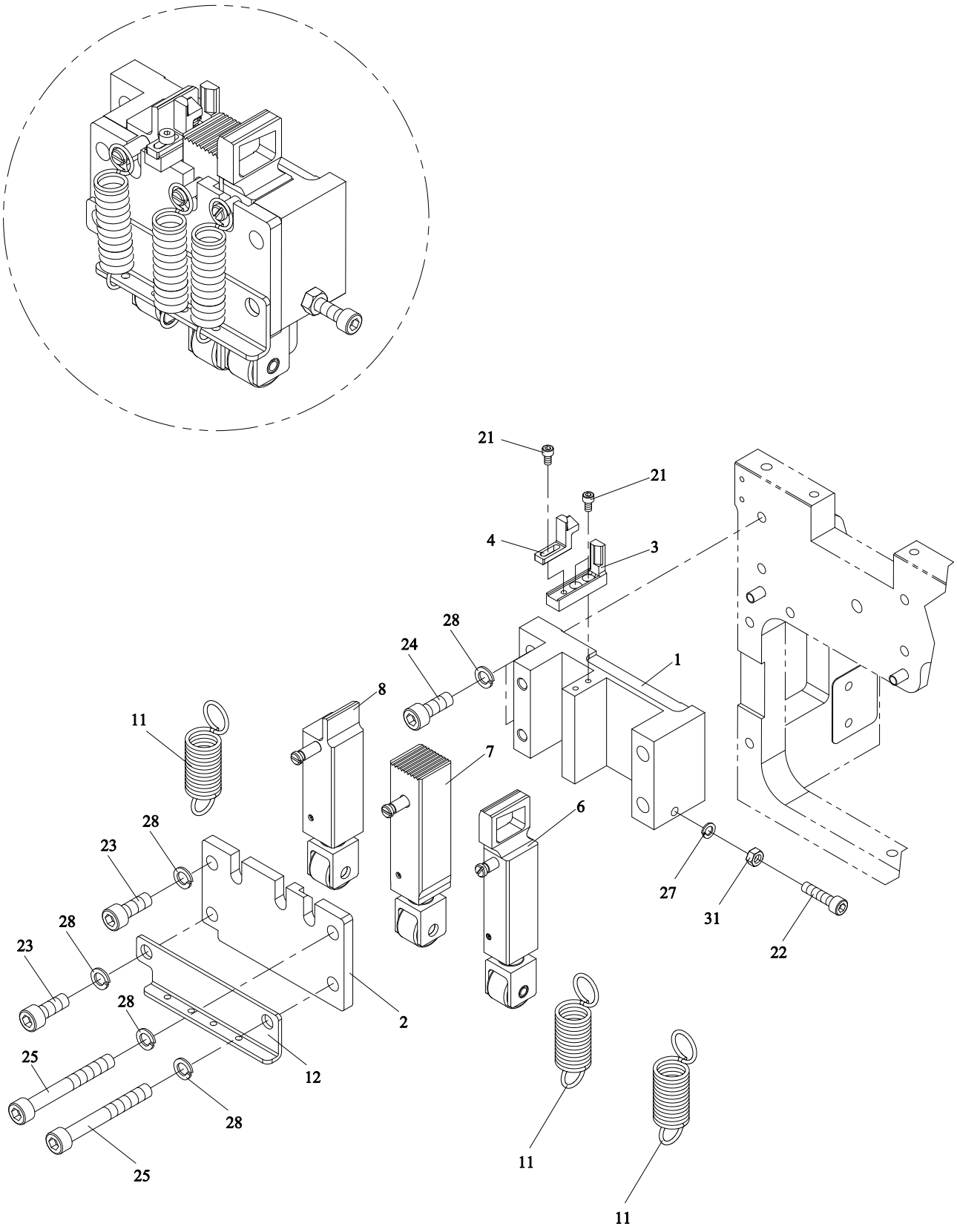
21
21
4
3
28
24
1
8
11
7
6
28
23
28
23
28
28
25
28
25
2
12
27
31
22
11
11

1-2 BAR GUIDE GROUP M7-1-200000

REF. NO.	PART NO.	DESCRIPTION	Q'TY	REMARKS
1	M7-1-201100	Bar Guide	1	
2	M7-1-201200	Bar Guide Lid	1	
	M7-1-201200S	Bar Guide Lid (Stainless Steel Model)(Option)	1	
3	M7-1-201300	Cutter Holder	1	
	M7-1-201300EN	Cutter Holder (Stainless Steel Model)(Option)	1	
4	M7-1-201400	Strap Guide	1	
	M7-1-201400EN	Strap Guide (Stainless Steel Model)(Option)	1	
6	M7-1-210001	Front Bar Ass'y	1	SEE PAGE C21
	M7-1-210001S	Front Bar Ass'y (Stainless Steel Model)(Option)	1	
7	M7-1-220000	Press Bar Ass'y	1	SEE PAGE C23
	M7-1-220000S	Press Bar Ass'y (Stainless Steel Model)(Option)	1	
8	M7-1-230000	Rear Bar Ass'y	1	SEE PAGE C25
	M7-1-230000S	Rear Bar Ass'y (Stainless Steel Model)(Option)	1	
11	TA-071	Return Spring	3	
12	T7-1-10180	Spring Hook	1	
21	HBS0308N	HBS, M3×8 (N)	3	
22	HBS0520N	HBS, M5×20 (N)	1	
23	HBS0616N	HBS, M6×16 (N)	2	
24	HBS0620N	HBS, M6×20 (N)	2	
25	HBS0650HN	HBS, M6×50 (H)(N)	2	
27	SW05	SW, M5	1	
28	SW06	SW, M6	6	
31	HN05	HN, M5	1	

1-2-1 FRONT BAR ASS'Y M7-1-210001

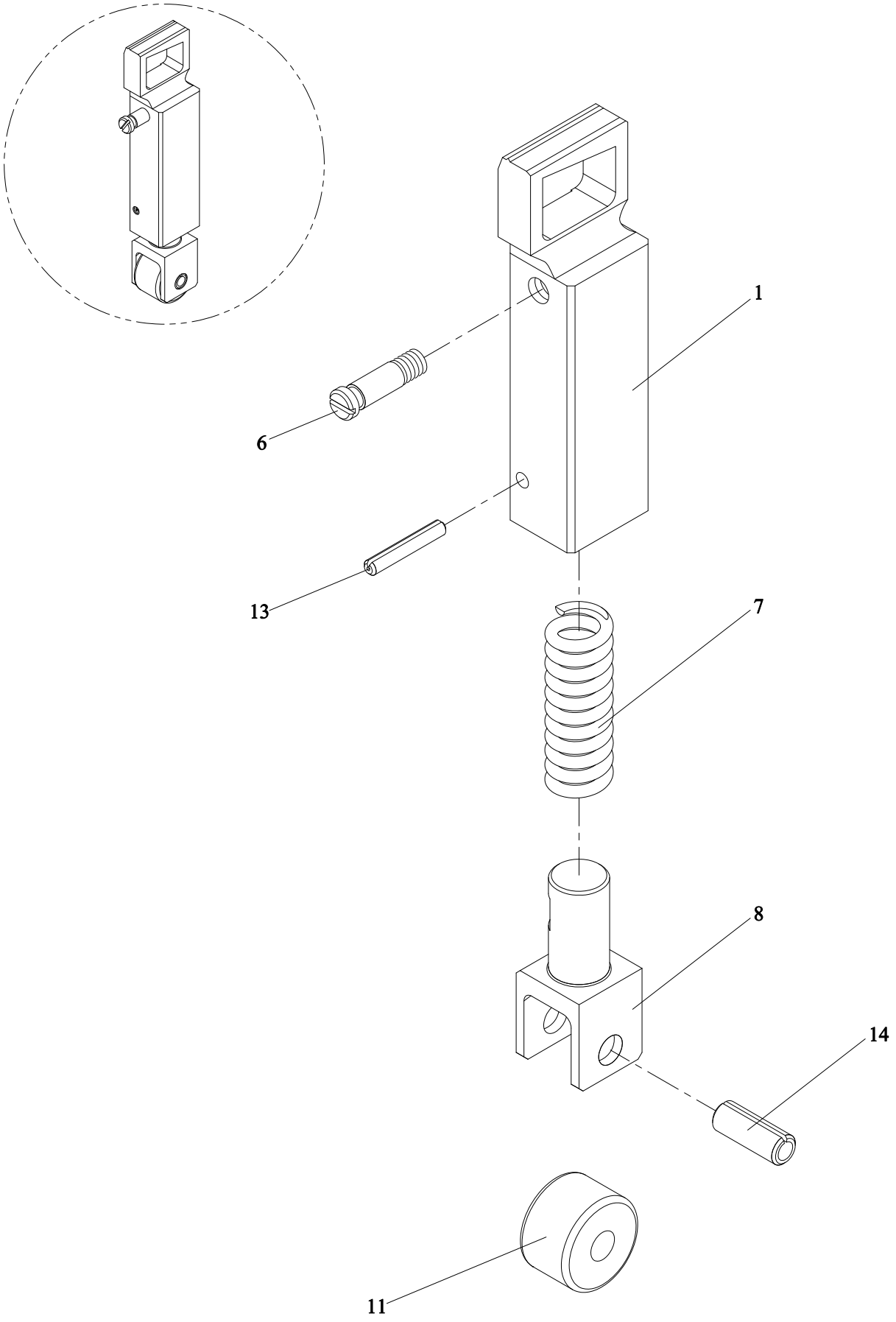

1-2-1 FRONT BAR ASS'Y M7-1-210001

REF. NO.	PART NO.	DESCRIPTION	Q'TY	REMARKS
	M7-1-210001	Front Bar Ass'y	1	
	M7-1-210001S	Front Bar Ass'y (Stainless Steel Model)(Option)	1	
1	M7-1-211101	Front Bar	1	
	M7-1-211101S	Front Bar (Stainless Steel Model)(Option)	1	
6	TA-073	Spring Hook	1	
7	TA-078	Spring	1	
8	T7-1-13121	Plunger	1	
11	BRNART6VR	Bearing, NART6VR	1	
13	SP0318	Spring Pin, 3×18	1	
14	SP0616	Spring Pin, 6×16	1	

1-2-2 PRESS BAR ASS'Y M7-1-220000

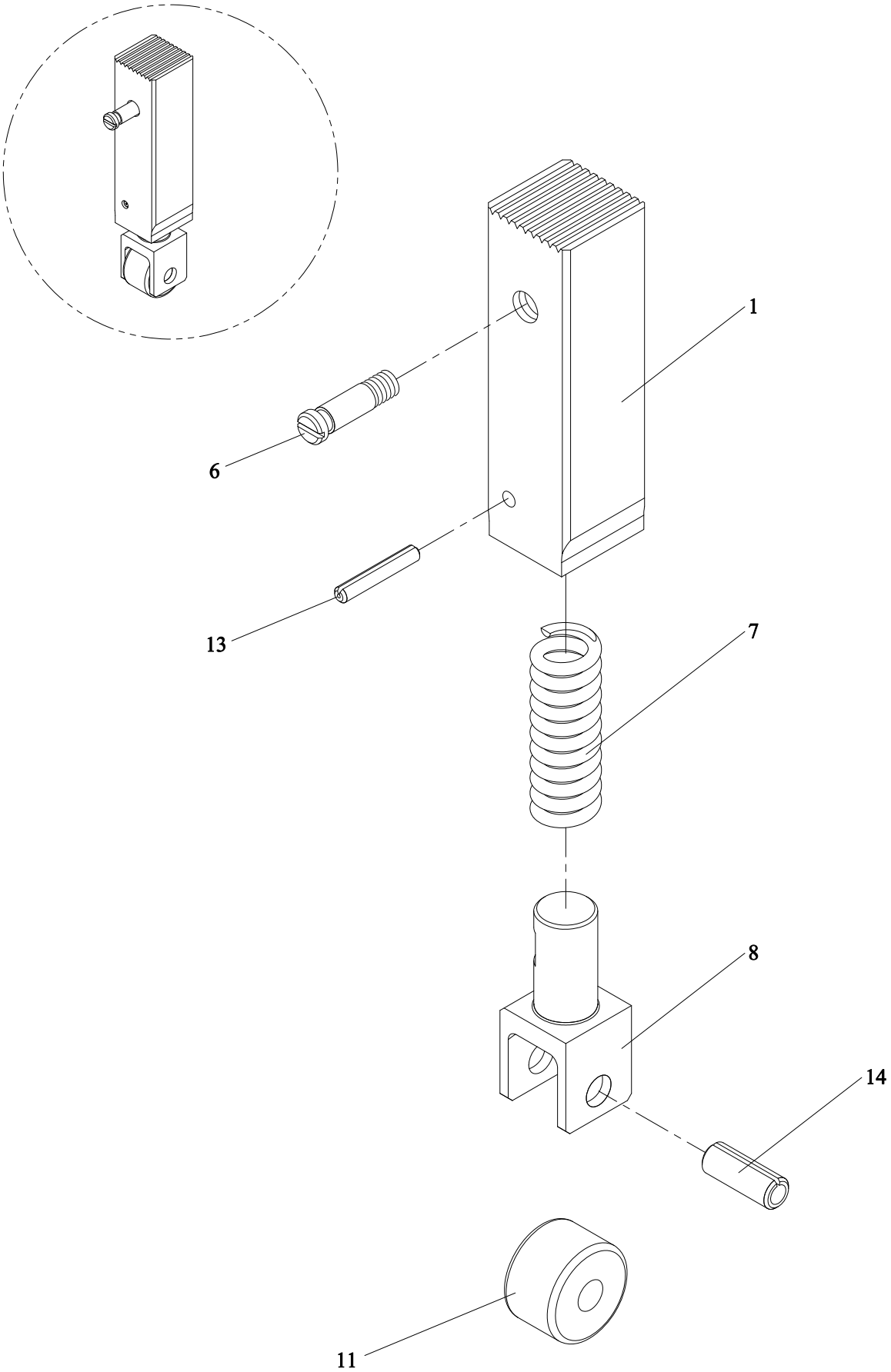

1-2-2 PRESS BAR ASS'Y M7-1-220000

REF. NO.	PART NO.	DESCRIPTION	Q'TY	REMARKS
	M7-1-220000	Press Bar Ass'y	1	
	M7-1-220000S	Press Bar Ass'y (Stainless Steel Model)(Option)	1	
1	M7-1-221200	Press Bar	1	
	M7-1-221200S	Press Bar (Stainless Steel Model)(Option)	1	
6	TA-073	Spring Hook	1	
7	TA-078	Spring	1	
8	T7-1-13121	Plunger	1	
11	BRNART6VR	Bearing, NART6VR	1	
13	SP0318	Spring Pin, 3×18	1	
14	SP0616	Spring Pin, 6×16	1	

1-2-3 REAR BAR ASS'Y M7-1-230000

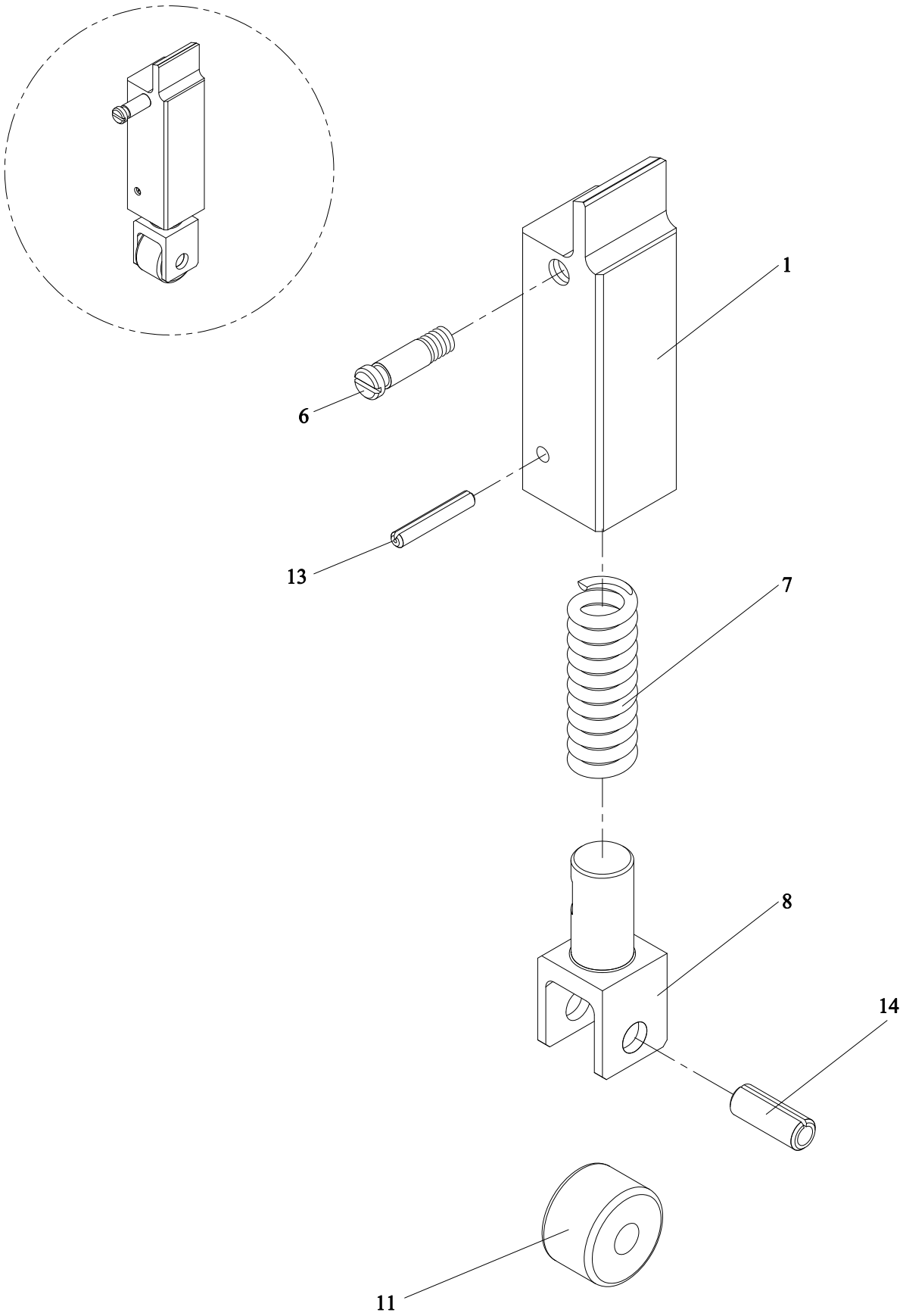

1-2-3 REAR BAR ASS'Y M7-1-230000

REF. NO.	PART NO.	DESCRIPTION	Q'TY	REMARKS
	M7-1-230000	Rear Bar Ass'y	1	
	M7-1-230000S	Rear Bar Ass'y (Stainless Steel Model)(Option)	1	
1	M7-1-231100	Rear Bar	1	
	M7-1-231100S	Rear Bar (Stainless Steel Model)(Option)	1	
6	TA-073	Spring Hook	1	
7	TA-078	Spring	1	
8	T7-1-13121	Plunger	1	
11	BRNART6VR	Bearing, NART6VR	1	
13	SP0318	Spring Pin, 3×18	1	
14	SP0616	Spring Pin, 6×16	1	

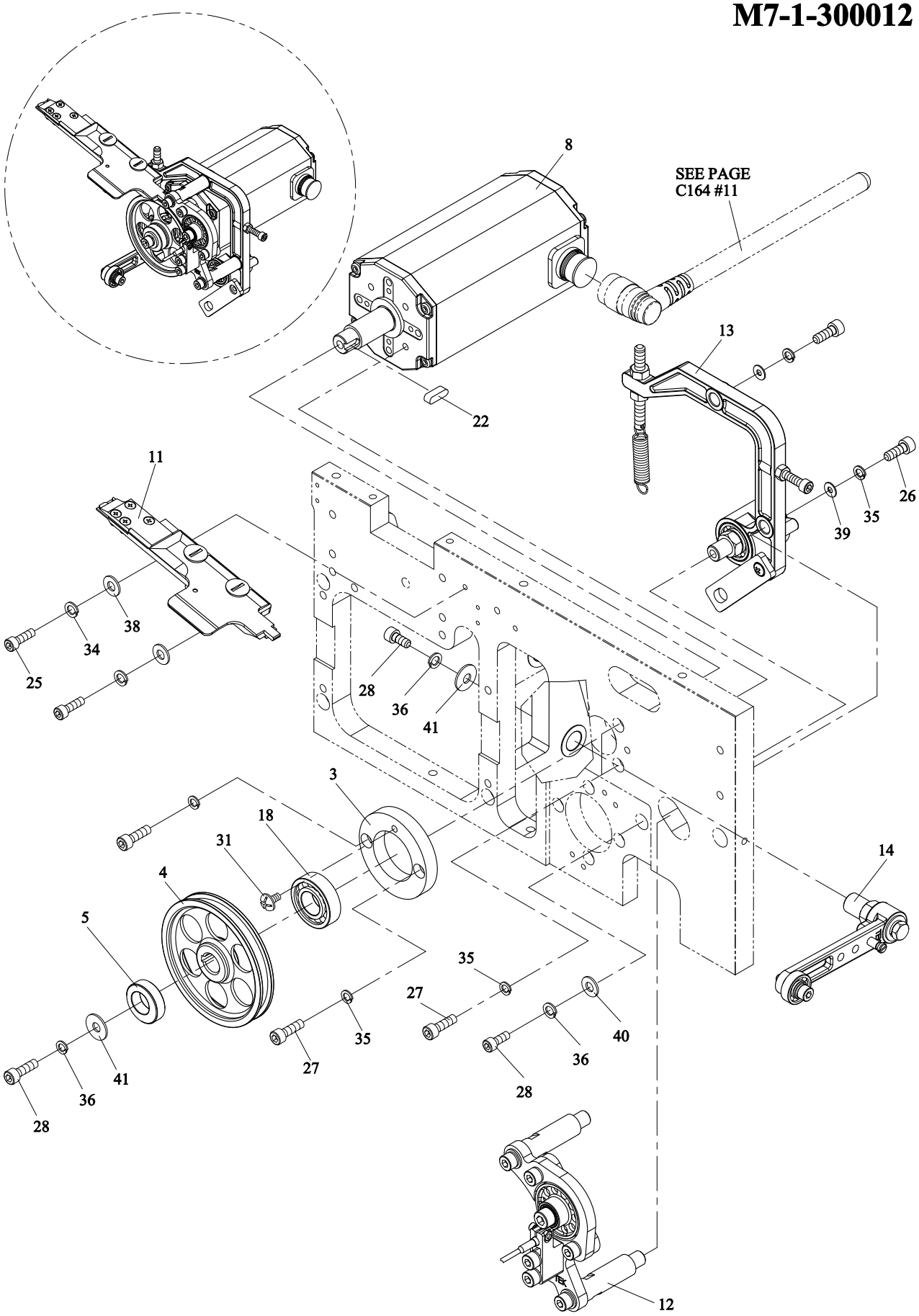
8
SEE PAGE
C164 #11
22
13
26
35
39
11
38
34
25
28
36
41
3
18
31
4
5
14
35
27
40
36
28
41
36
28
27
35
12

1-3 FEED GROUP M7-1-300002 M7-1-300012

REF. NO.	PART NO.	DESCRIPTION	Q'TY	REMARKS
	M7-1-300002	Feed Group (For 5-6mm)	1	
	M7-1-300012	Feed Group (For 9mm)	1	
3	M7-1-301300	Bearing Housing	1	
4	M7-1-301400	Guide Wheel (For 5-6mm)	1	
	M7-1-301410	Guide Wheel (For 9mm)	1	
5	M7-1-301500	Spacer (For 5-6mm)	1	
	M7-1-301510	Spacer (For 9mm)	1	
8	M7-1-300100	Feeding Motor (M2) Set	1	
11	M7-1-310001	Upper Guide Ass'y (For 5-6mm)	1	SEE PAGE C29
	M7-1-310001S	Upper Guide Ass'y (Stainless Steel Model) (For 5-6mm)(Option)	1	
	M7-1-310011	Upper Guide Ass'y (For 9mm)	1	
	M7-1-310011S	Upper Guide Ass'y (Stainless Steel Model) (For 9mm)(Option)	1	
12	M7-1-320001	Assistant Roller Ass'y (For 5-6mm)	1	SEE PAGE C31
	M7-1-320011	Assistant Roller Ass'y (For 9mm)	1	
13	M7-1-330000	Feeding Arm Ass'y	1	SEE PAGE C33
14	M7-1-340000	Retracting Arm Ass'y	1	SEE PAGE C35
18	BR6002ZZ	Bearing, 6002ZZ	1	
22	KYA040415	Key, 4×4×15	1	
25	HBS0412N	HBS, M4×12 (N)	2	
26	HBS0512N	HBS, M5×12 (N)	2	
27	HBS0516N	HBS, M5×16 (N)	6	
28	HBS0612N	HBS, M6×12 (N)	3	
31	TMS0508N	TMS, M5×8 (N)	1	
34	SW04	SW, M4	2	
35	SW05	SW, M5	8	
36	SW06	SW, M6	3	
38	PW04	PW, M4	2	
39	PW05	PW, M5	2	
40	PW06A	PW, M6 (A)	1	
41	PW06C	PW, M6 (C)	2	

1-3-1 UPPER GUIDE ASS'Y M7-1-310001 M7-1-310011

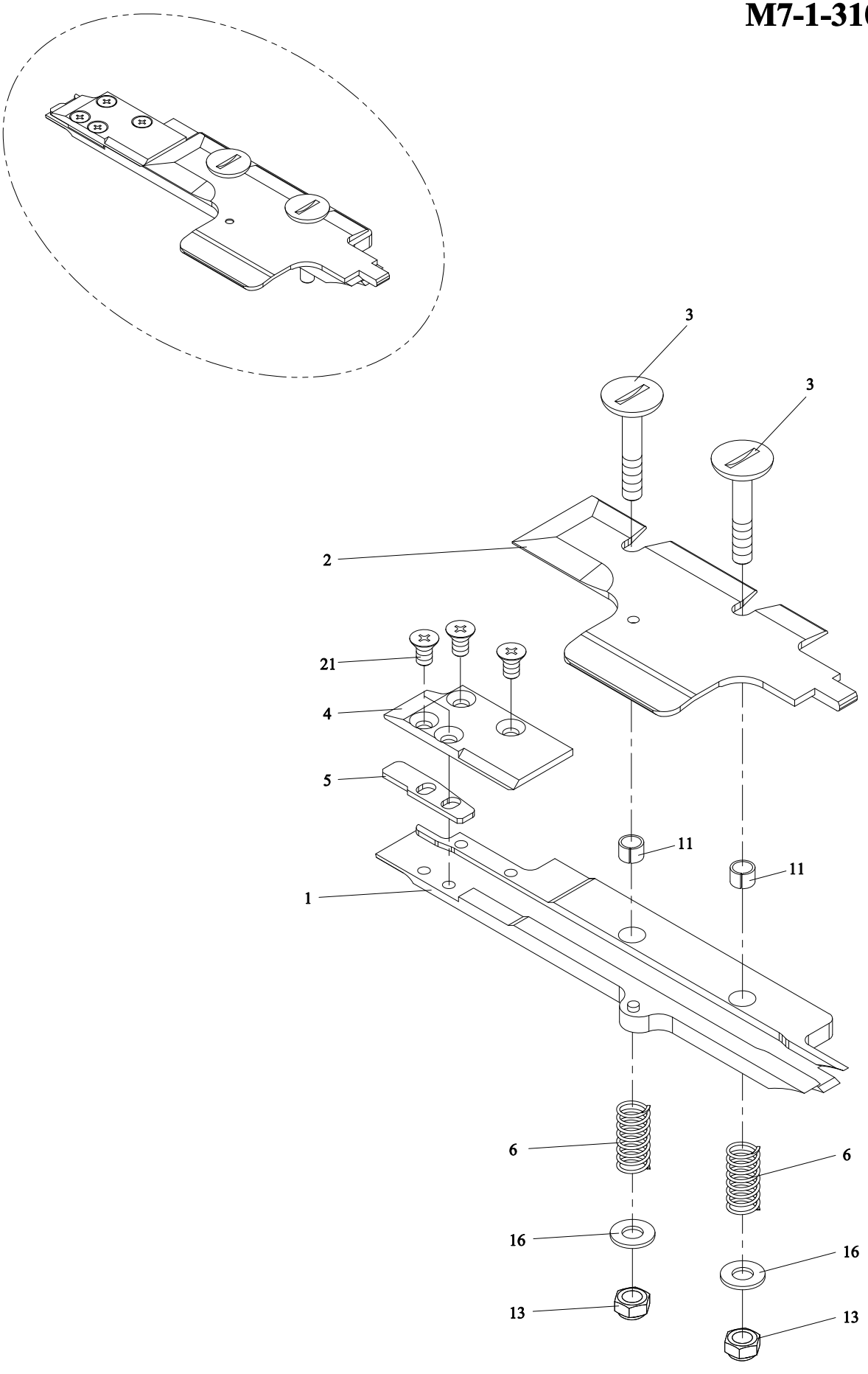

1-3-1 UPPER GUIDE ASS'Y M7-1-310001 M7-1-310011

REF. NO.	PART NO.	DESCRIPTION	Q'TY	REMARKS
	M7-1-310001	Upper Guide Ass'y (For 5-6mm)	1	
	M7-1-310001S	Upper Guide Ass'y (Stainless Steel Model) (For 5-6mm)(Option)	1	
	M7-1-310011	Upper Guide Ass'y (For 9mm)	1	
	M7-1-310011S	Upper Guide Ass'y (Stainless Steel Model) (For 9mm)(Option)	1	
1	M7-1-311103	Upper Guide (For 5-6mm)	1	
	M7-1-311103EN	Upper Guide (Stainless Steel Model) (For 5-6 mm)(Option)	1	
	M7-1-311113	Upper Guide (For 9 mm)	1	
	M7-1-311113EN	Upper Guide (Stainless Steel Model) (For 9 mm)(Option)	1	
2	M7-1-311201	Cover (For 5-6mm)	1	
	M7-1-311201EN	Cover (Stainless Steel Model)(For 5-6mm) (Option)	1	
	M7-1-311211	Cover (For 9mm)	1	
	M7-1-311211EN	Cover (Stainless Steel Model)(For 9mm) (Option)	1	
3	M7-1-311300	Bolt	2	
	M7-1-311300S	Bolt (Stainless Steel Model)(Option)	2	
4	M7-1-311402	Cover (Only 5-6mm)	1	
	M7-1-311402S	Cover (Stainless Steel Model)(Only 5-6mm) (Option)	1	
5	M7-1-311500	Adjusting Plate (Only 5-6mm)	1	
6	H44-10940	Spring	2	
11	MB0505	Metal Bushing, 0505	2	
13	NTE05	NTE, M5	2	
16	PW05	PW, M5	2	
21	FMS0408N	FMS, M4×8 (N)(Only 5-6mm)	4	
	FMS0408S	FMS, M4×8 (Stainless Steel Model) (Only 5-6mm)(Option)	4	

1-3-2 ASSISTANT ROLLER ASS'Y M7-1-320001 M7-1-320011

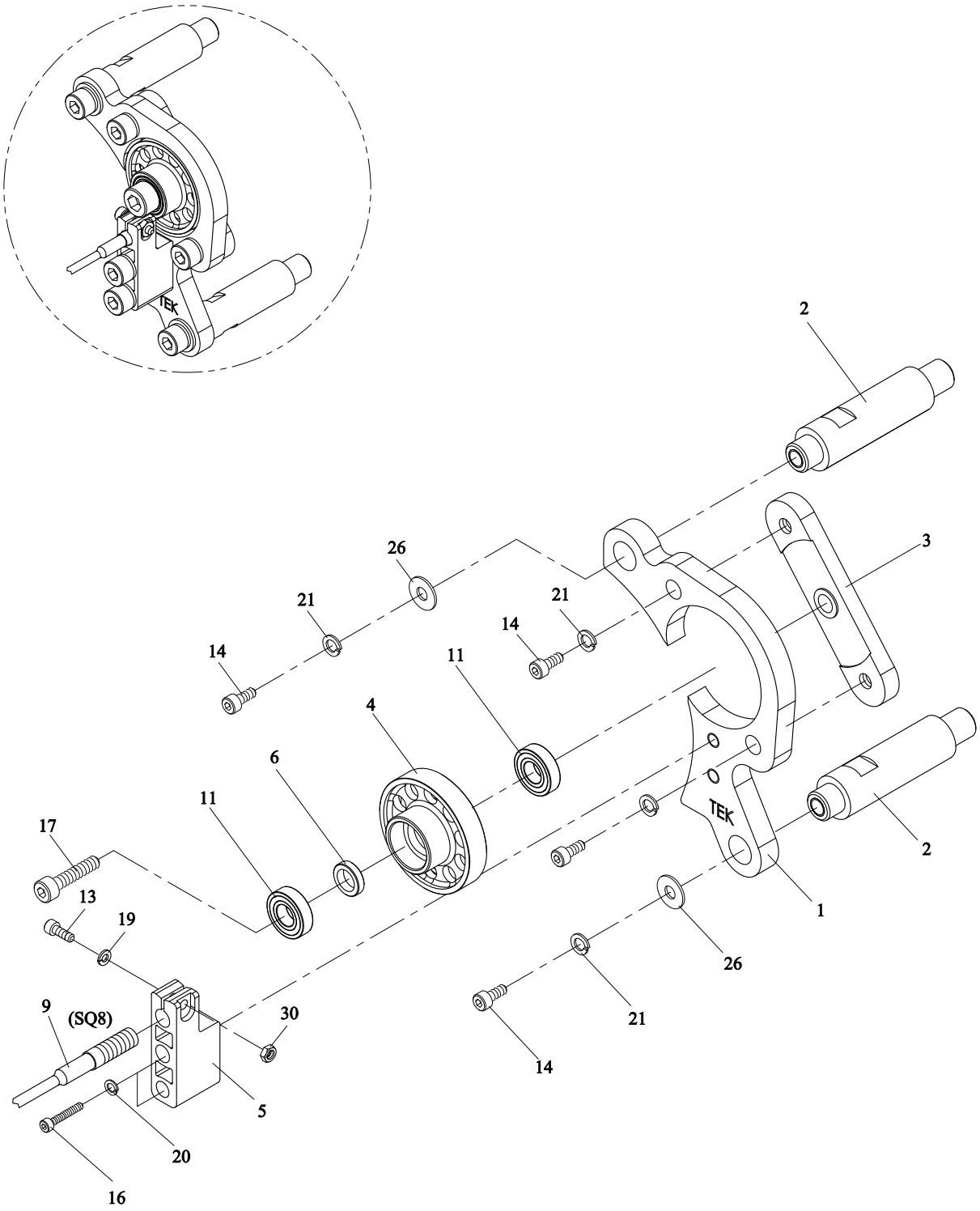

1-3-2 ASSISTANT ROLLER ASS'Y M7-1-320001 M7-1-320011

REF. NO.	PART NO.	DESCRIPTION	Q'TY	REMARKS
	M7-1-320001	Assistant Roller Ass'y (For 5-6mm)	1	
	M7-1-320011	Assistant Roller Ass'y (For 9mm)	1	
1	M7-1-321100	Assistant Roller Bracket (For 5-6mm)	1	
	M7-1-321100EN	Assistant Roller Bracket (Stainless Steel Model)(For 5-6mm)(Option)	1	
	M7-1-321110	Assistant Roller Bracket (For 9mm)	1	
	M7-1-321110EN	Assistant Roller Bracket (Stainless Steel Model)(For 9mm)(Option)	1	
2	M7-1-321200	Shaft	2	
3	M7-1-321300	Assistant Roller Base	1	
4	M7-1-321400	Assistant Roller (For 5-6mm)	1	
	M7-1-321410	Assistant Roller (For 9mm)	1	
5	M7-1-321501	SQ8 Sensor Base	1	
6	M7-1-321600	Spacer	1	
9	M7-6-301100	Proximity Switch (X20)(SQ8)	1	SEE PAGE C153
11	BR686ZZ	Bearing, 686ZZ	2	
13	HBS02.512N	HBS, M2.5×12 (N)	1	
14	HBS0512N	HBS, M5×12 (N)	4	
16	HBS0425N	HBS, M4×25 (N)	2	
17	HBS0620N	HBS, M6×20 (N)	1	
19	SW02.5	SW, M2.5	1	
20	SW04	SW, M4	2	
21	SW05	SW, M5	4	
26	PW05	PW, M5	2	
30	HN02.5	HN, M2.5	1	

1-3-3 FEEDING ARM ASS'Y M7-1-330000

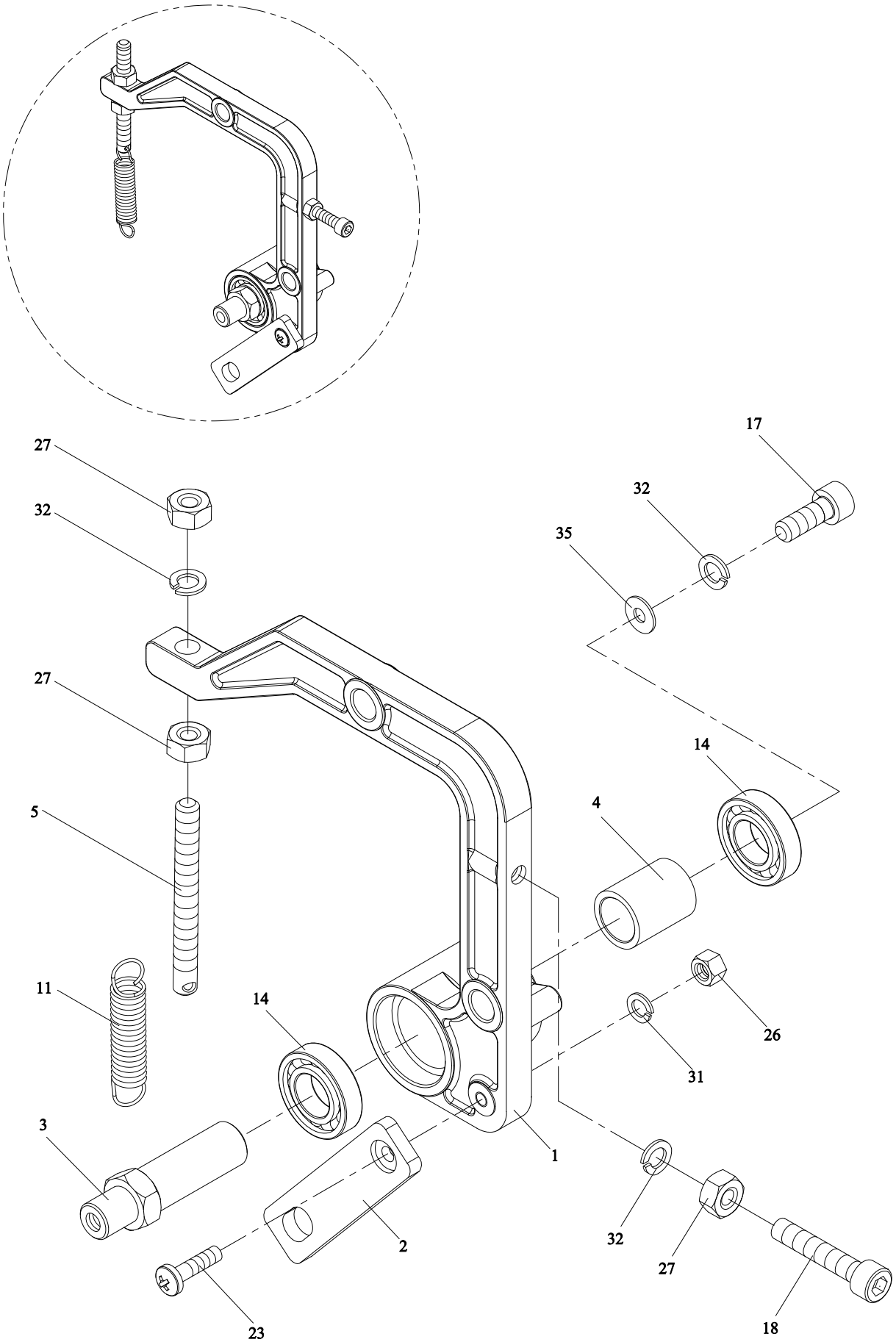

1-3-3 FEEDING ARM ASS'Y M7-1-330000

REF. NO.	PART NO.	DESCRIPTION	Q'TY	REMARKS
1	M7-1-331100	Feeding Arm	1	
2	M7-1-331200	Linkage	1	
3	M7-1-331300	Shaft	1	
4	M7-1-331400	Collar	1	
5	M7-1-331500	Spring Hook	1	
11	T7-1-64130	Return Spring	1	
14	BR6901ZZ	Bearing, 6901ZZ	2	
17	HBS0616N	HBS, M6×16 (N)	1	
18	HBS0640N	HBS, M6×40 (N)	1	
23	PMS0420	PMS, M4×20	1	
26	HN04	HN, M4	1	
27	HN06	HN, M6	3	
31	SW04	SW, M4	1	
32	SW06	SW, M6	3	
35	PW06C	PW, M6 (C)	1	

1-3-4 RETRACTING ARM ASS'Y M7-1-340000

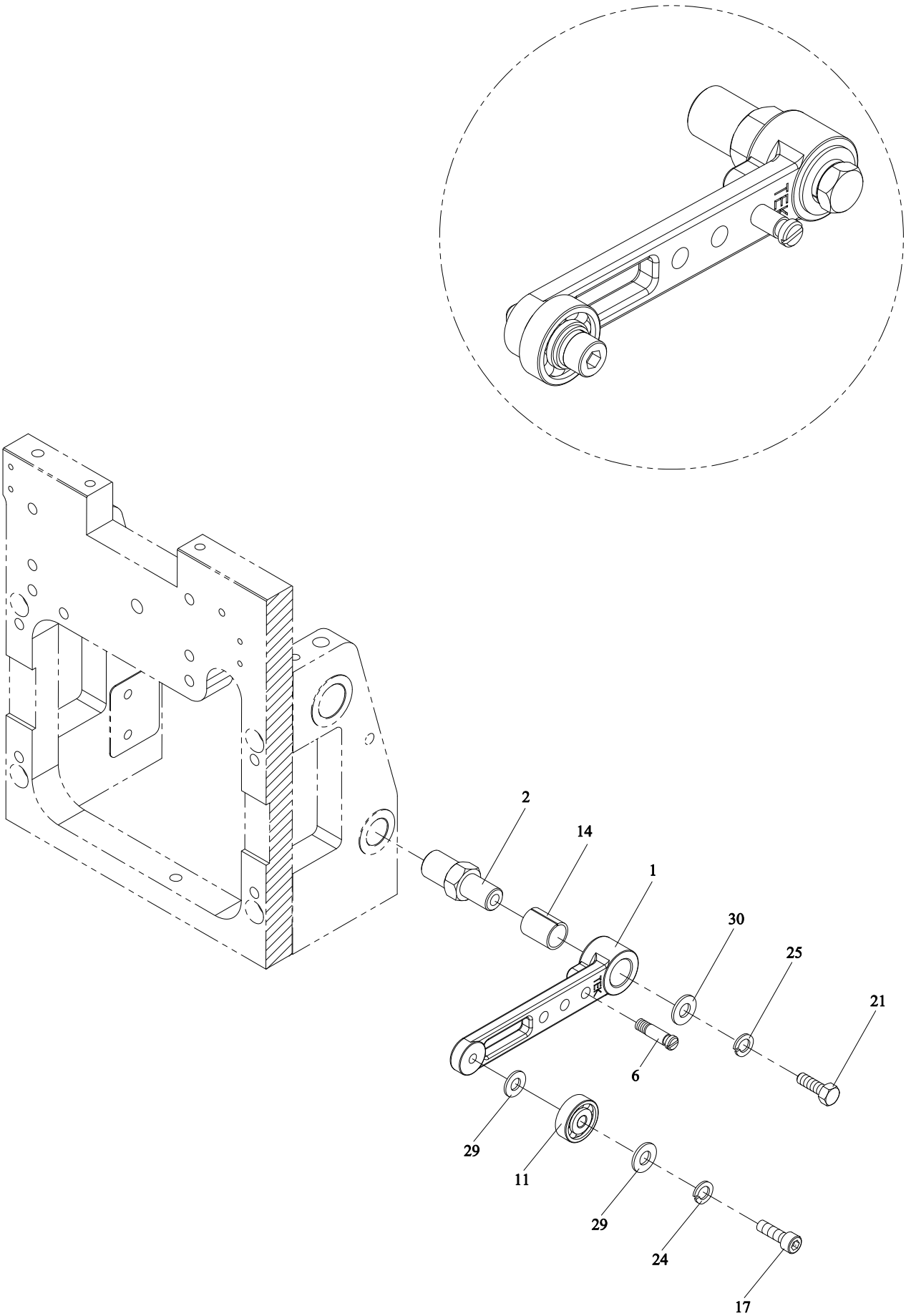

1-3-4 RETRACTING ARM ASS'Y M7-1-340000

REF. NO.	PART NO.	DESCRIPTION	Q'TY	REMARKS
1	M7-1-341100	Retracting Arm	1	
2	M7-1-341200	Shaft	1	
6	TA-073	Spring Hook	1	
11	BR635ZZ	Bearing, 635ZZ	1	
14	MB1015	Metal Bushing, 1015	1	
17	HBS0516N	HBS, M5×16 (N)	1	
21	HB0612	HB, M6×12	1	
24	SW05	SW, M5	1	
25	SW06	SW, M6	1	
29	PW05	PW, M5	2	
30	PW06B	PW, M6 (B)	1	

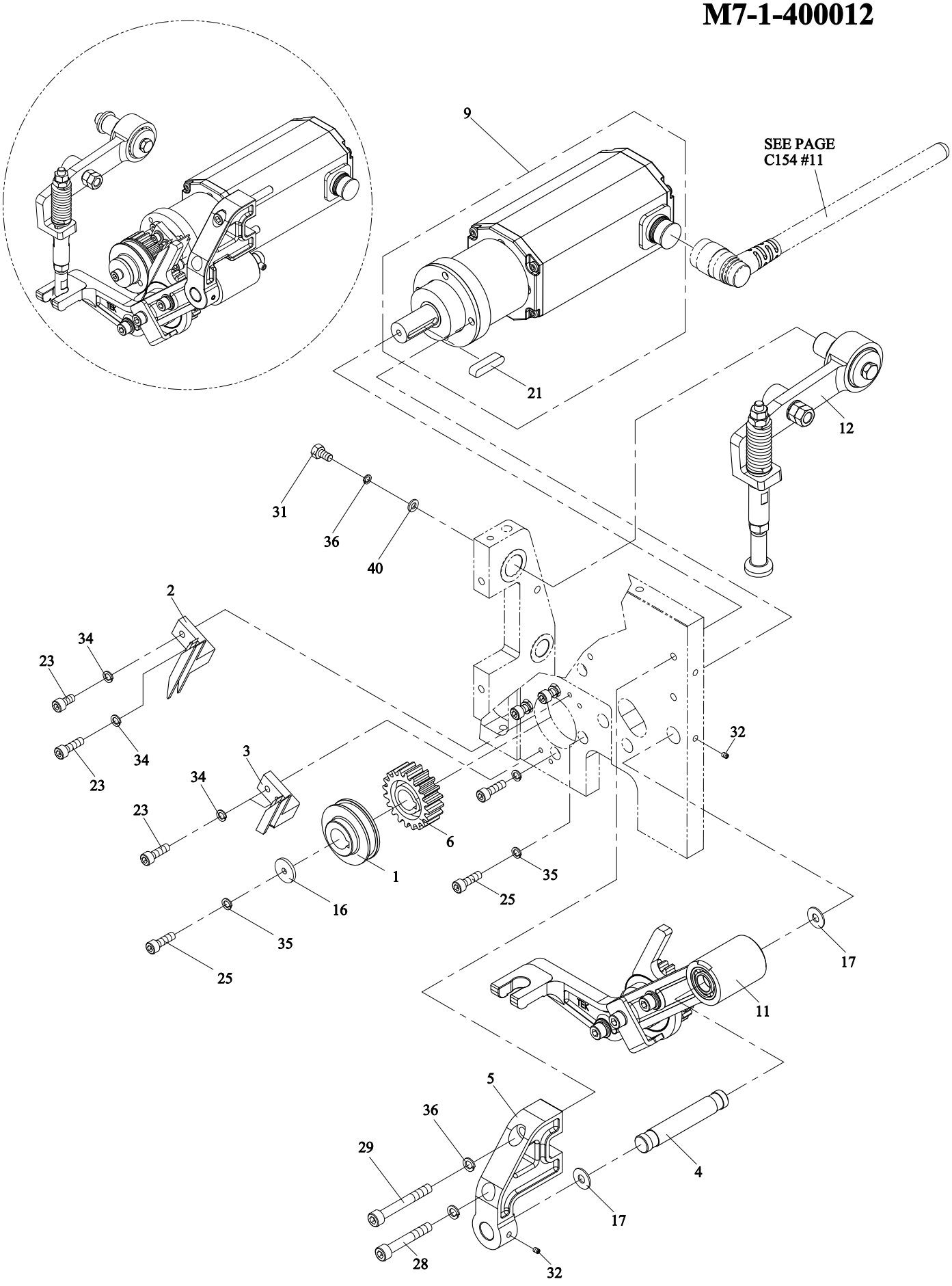
9
SEE PAGE
C154 #11
21
12
31
36
40
2
34
23
34
23
3
34
23
6
1
16
35
25
35
25
32
17
11
5
36
29
28
32
17
4

1-4 TENSION GROUP M7-1-400002 M7-1-400012

REF. NO.	PART NO.	DESCRIPTION	Q'TY	REMARKS
	M7-1-400002	Tension Group (For 5-6mm)	1	
	M7-1-400012	Tension Group (For 9mm)	1	
1	M7-1-401100	Tension Guide Wheel (For 5-6mm)	1	
	M7-1-401100S	Tension Guide Wheel (Stainless Steel Model) (For 5-6mm)(Option)	1	
	M7-1-401110	Tension Guide Wheel (For 9mm)	1	
	M7-1-401110S	Tension Guide Wheel (Stainless Steel Model) (For 9mm)(Option)	1	
2	M7-1-401200	Guide (For 5-6mm)	1	
	M7-1-401210	Guide (For 9mm)	1	
3	M7-1-401300	Tension Guide (For 5-6mm)	1	
	M7-1-401310	Tension Guide (For 9mm)	1	
4	M7-1-401400	Shaft	1	
5	M7-1-401500	Bracket	1	
6	M7-1-401600	Gear	1	
9	M7-1-301100	M3 Motor	1	
	M7-1-301110	M3 Motor (For 9mm, Tension 45kg)(Option)	1	
11	M7-1-410001	Tension Crank Ass'y (For 5-6mm)	1	SEE PAGE C39
	M7-1-410011	Tension Crank Ass'y (For 9mm)	1	
12	M7-1-420001	Tension Arm Ass'y	1	SEE PAGE C41
	M7-1-420011	Tension Arm Ass'y (For 9mm, Tension 45kg) (Option)	1	
16	TB-223	Washer	1	
17	AD-2-20181	Washer	2	
21	KYA050527	Key, 5×5×27	1	
23	HBS0412N	HBS, M4×12 (N)	4	
25	HBS0516N	HBS, M5×16 (N)	5	
28	HBS0640HN	HBS, M6×40 (H)(N)	1	
29	HBS0655HN	HBS, M6×55 (H)(N)	1	
31	HB0612	HB, M6×12	1	
32	HSS0506GN	HSS, M5×6 (G)(N)	2	
34	SW04	SW, M4	4	
35	SW05	SW, M5	5	
36	SW06	SW, M6	3	
40	PW06C	PW, M6 (C)	1	

1-4-1 TENSION CRANK ASS'Y M7-1-410001 M7-1-410011

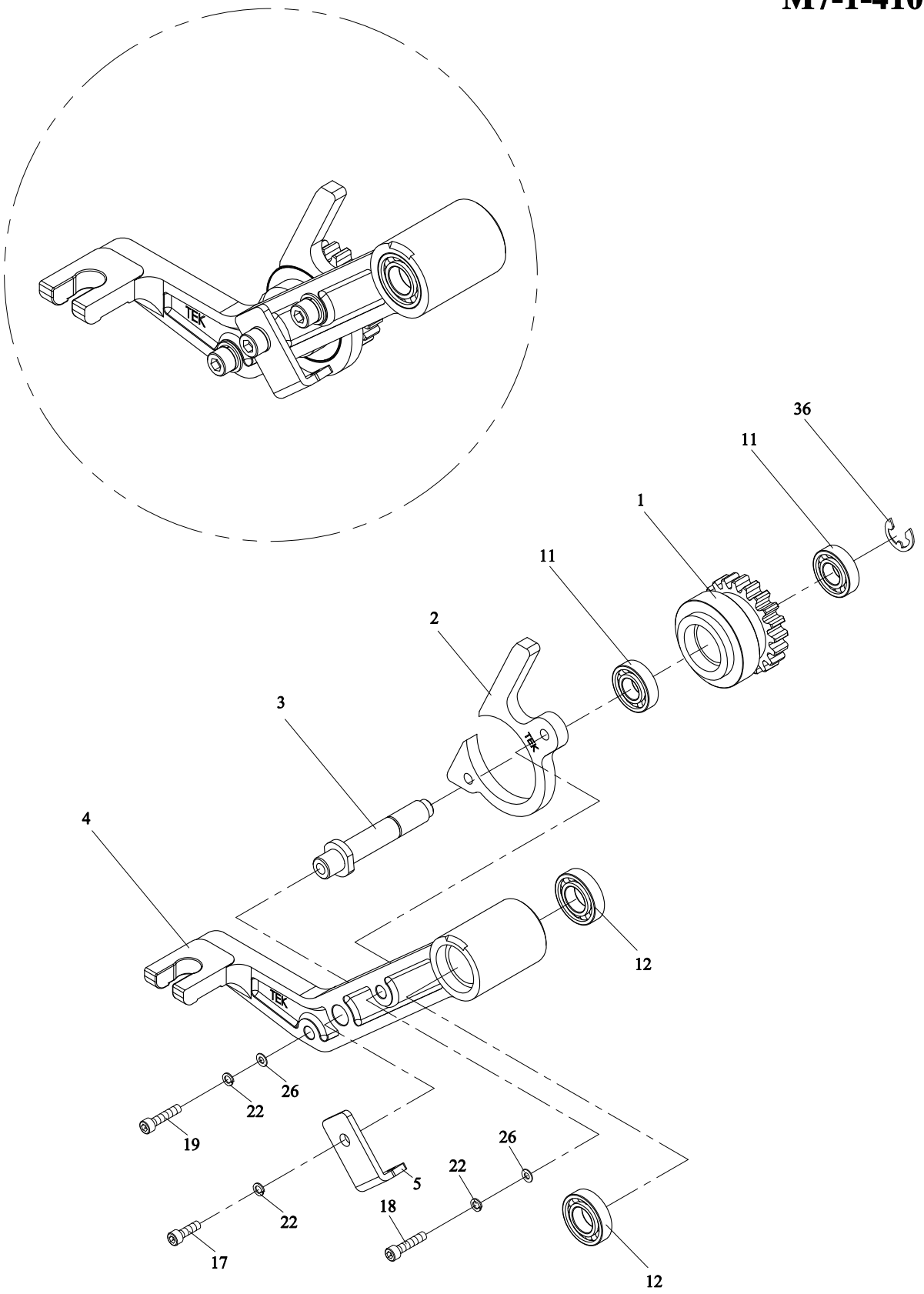

1-4-1 TENSION CRANK ASS'Y M7-1-410001 M7-1-410011

REF. NO.	PART NO.	DESCRIPTION	Q'TY	REMARKS
	M7-1-410001	Tension Crank Ass'y (For 5-6mm)	1	
	M7-1-410011	Tension Crank Ass'y (For 9mm)	1	
1	M7-1-411100	Assistant Roller (For 5-6mm)	1	
	M7-1-411100S	Assistant Roller (Stainless Steel Model) (For 5-6mm)(Option)	1	
	M7-1-411110	Assistant Roller (For 9mm)	1	
	M7-1-411110S	Assistant Roller (Stainless Steel Model) (For 9mm)(Option)	1	
2	M7-1-411200	Assistant Roller Housing (For 5-6mm)	1	
	M7-1-411200EN	Assistant Roller Housing (Stainless Steel Model)	1	
	M7-1-411210	Assistant Roller Housing (For 9mm)	1	
	M7-1-411210EN	Assistant Roller Housing (Stainless Steel Model)	1	
3	M7-1-411300	Shaft	1	
4	M7-1-411400	Tension Crank	1	
5	M7-1-411500	Spring Hook	1	
11	BR6900ZZ	Bearing, 6900ZZ	2	
12	BR6901ZZ	Bearing, 6901ZZ	2	
17	HBS0612N	HBS, M6×12 (N)	1	
18	HBS0630N	HBS, M6×30 (N)	2	
22	SW06	SW, M6	3	
26	PW06A	PW, M6 (A)	2	
36	ER08	Snap Ring, E-8	1	

1-4-2 TENSION ARM ASS'Y M7-1-420001 M7-1-420011

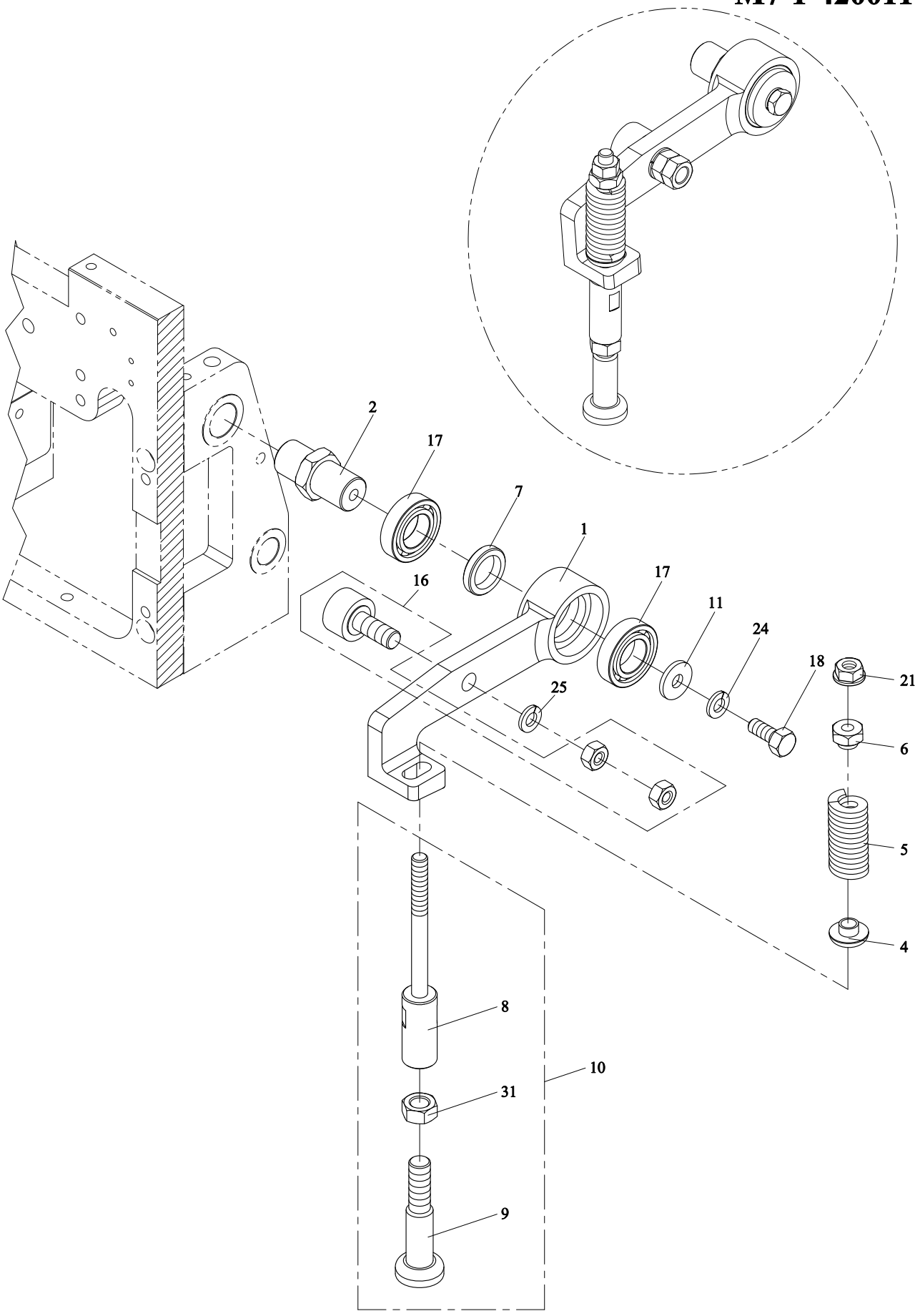

1-4-2 TENSION ARM ASS'Y M7-1-420001 M7-1-420011

REF. NO.	PART NO.	DESCRIPTION	Q'TY	REMARKS
	M7-1-420001	Tension Arm Ass'y	1	
	M7-1-420011	Tension Arm Ass'y (For 9mm, Tension 45kg) (Option)	1	
1	M7-1-421101	Tension Arm	1	
2	M7-1-421200	Shaft	1	
4	M7-1-421400	Spring Support	1	
5	M7-1-421510	Spring	1	
	M7-1-421520	Spring (For 9mm, Tension 45kg)(Option)	1	
6	M7-1-421600	Nut	1	
7	M7-1-421700	Collar	1	
8	M7-1-421800	Connecting Rod (Upper)	1	
9	M7-1-421900	Connecting Rod (Lower)	1	
10	M7-1-420100	Connecting Rod Set	1	
11	TB-223	Washer	1	
16	BRCF8	Bearing, CF8	1	
17	BR6902ZZ	Bearing, 6902ZZ	2	
18	HB0612	HB, M6×12	1	
21	FLG06	FLG, M6	1	
24	SW06	SW, M6	1	
25	SW08	SW, M8	1	
31	HN08	HN, M8	1	

2 BANDWAY UNIT M7-2-900002 M7-2-900012

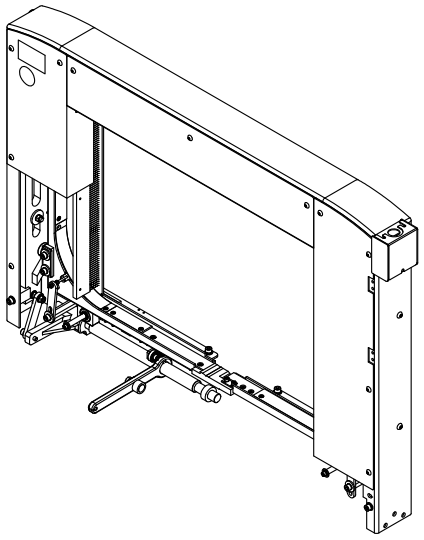

1

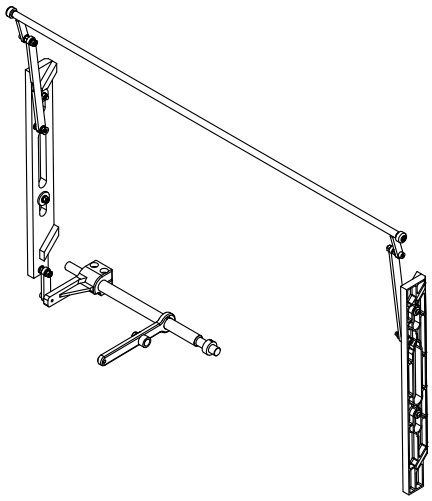

3

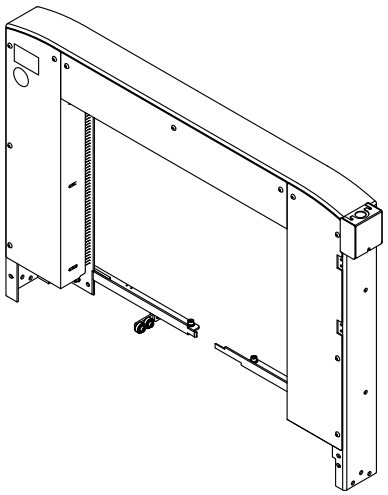

2

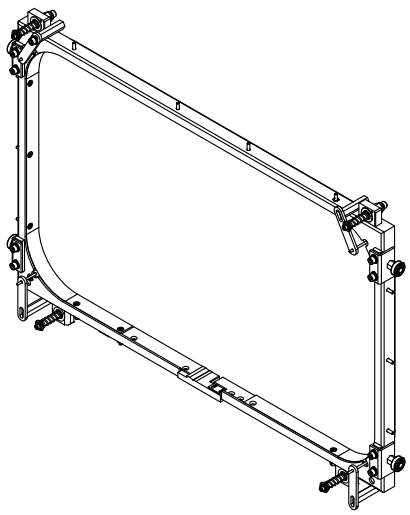

4

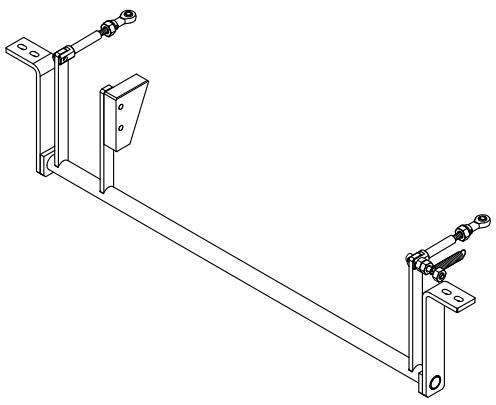

(For 850W~1650W)

2 BANDWAY UNIT M7-2-900002 M7-2-900012

REF. NO.	PART NO.	DESCRIPTION	Q'TY	REMARKS
	M7-2-900002	Bandway Unit (For 5-6mm)	1	
	M7-2-900002S	Bandway Unit (Stainless Steel Model) (For 5-6mm)	1	
	M7-2-900012	Bandway Unit (For 9mm)	1	
	M7-2-900012S	Bandway Unit (Stainless Steel Model) (For 9mm)	1	
1	M7-2-100000	Arch Group	1	SEE PAGE C45
	M7-2-100000S	Arch Group (Stainless Steel Model)	1	
2	M7-2-200002	Bandway Group (For 5-6mm)	1	SEE PAGE C49
	M7-2-200002S	Bandway Group (Stainless Steel Model) (For 5-6mm)	1	
	M7-2-200012	Bandway Group (For 9mm)	1	
	M7-2-200012S	Bandway Group (Stainless Steel Model) (For 9mm)	1	
3	M7-2-300001	Arch Cover Group	1	SEE PAGE C57
	M7-2-300001S	Arch Cover Group (Stainless Steel Model)	1	
4	M7-2-400010	Connecting Rod Group (For 850W/1050W)	1	SEE PAGE C64-1
	M7-2-400000	Connecting Rod Group (For 1250W/1650W)	1	SEE PAGE C65

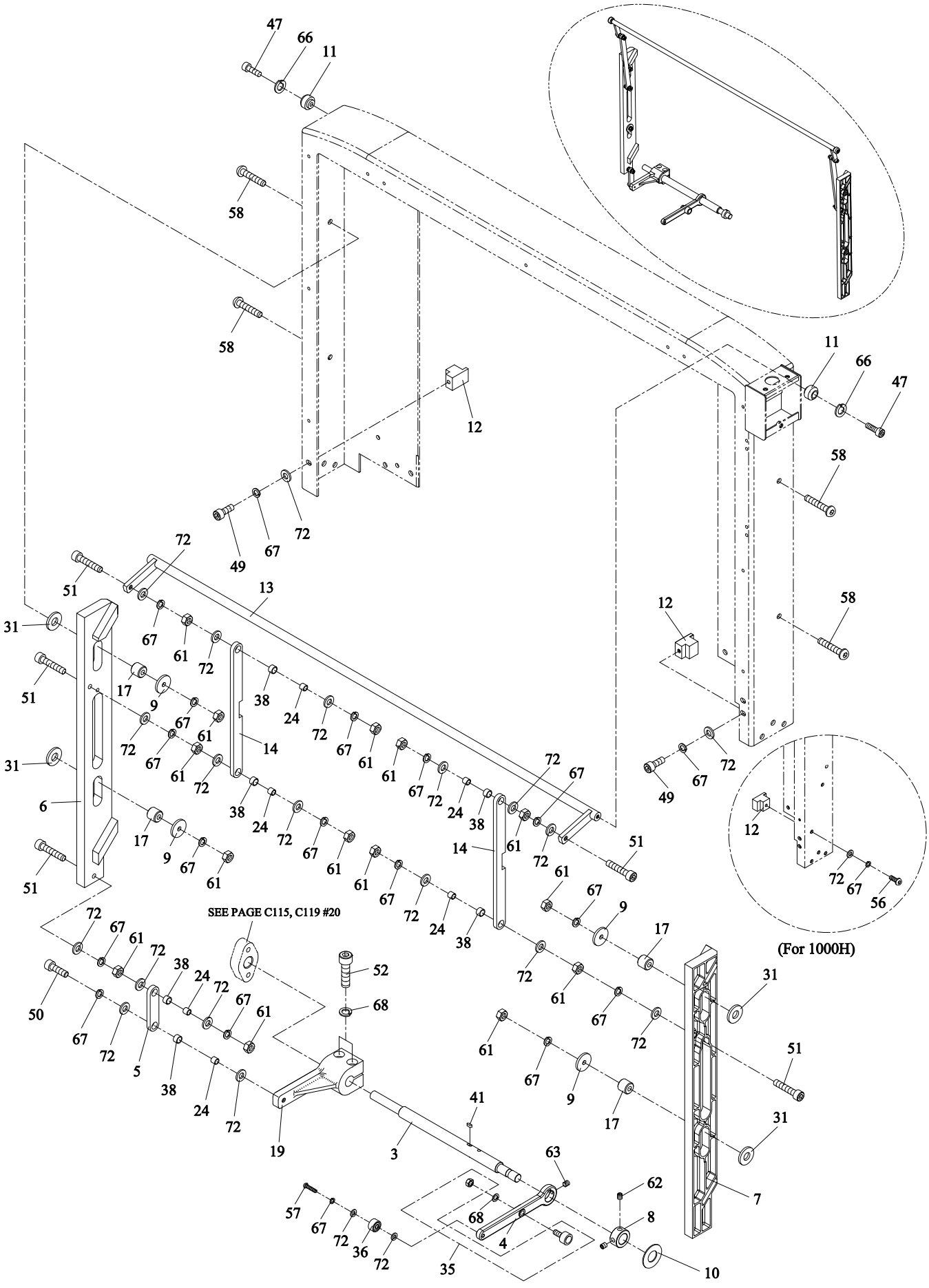
SEE PAGE C115, C119 #20
(For 1000H)

2-1 ARCH GROUP M7-2-100000

REF. NO.	PART NO.	DESCRIPTION	Q'TY	REMARKS
	M7-2-100000	Arch Group	1	
	M7-2-100000S	Arch Group (Stainless Steel Model)	1	
3	M7-2-101300	Rod (For 550W)	1	
	M7-2-101310	Rod (For 650W)	1	
	M7-2-101320	Rod (For 850W)	1	
	M7-2-101330	Rod (For 1050W)	1	
	M7-2-101340	Rod (For 1250W)	1	
	M7-2-101350	Rod (For 1650W)	1	
4	M7-2-101400	Lever (For 550W/650W)	1	
	M7-2-101410	Lever (For 850W~1650W)	1	
5	M7-2-101500	Plate (For 400H~800H)	1	
	M7-2-101510	Plate (For 1000H)	1	
6	M7-2-101600	Left Bar (For 400H)	1	
	M7-2-101610	Left Bar (For 500H)	1	
	M7-2-101620	Left Bar (For 600H)	1	
	M7-2-101630	Left Bar (For 800H/1000H)	1	
7	M7-2-101700	Right Bar (For 400H)	1	
	M7-2-101710	Right Bar (For 500H)	1	
	M7-2-101720	Right Bar (For 600H)	1	
	M7-2-101730	Right Bar (For 800H/1000H)	1	
8	M7-1-101600	Collar	1	
9	TB-223	Washer (For 400H/500H)	4	
		Washer (For 600H)	6	
		Washer (For 800H/1000H)	8	
10	H42-1227	Washer	1	
11	T7-2-10110	Bushing	2	
12	T7-2-10120	Guide (For 400H~800H)	2	
	T7-2-10770	Guide (For 1000H)	2	
13	T7-2-10220	Connecting Rod (For 550W)	1	
	T7-2-10221	Connecting Rod (For 650W)	1	
	T7-2-10222	Connecting Rod (For 850W)	1	
	T7-2-10223	Connecting Rod (For 1050W)	1	
	T7-2-10224	Connecting Rod (For 1250W)	1	
	T7-2-10226	Connecting Rod (For 1650W)	1	
14	T7-2-10230	Connector	2	
17	T7-2-10260	Spacer (For 400H/500H)	4	
		Spacer (For 600H)	6	
		Spacer (For 800H/1000H)	8	
19	T7-2-10290	Arm	1	
24	T7-3-10530	Tube	6	
31	WT163015	Thrust Washer (For 400H/500H)	4	
		Thrust Washer (For 600H)	6	
		Thrust Washer (For 800H/1000H)	8	
35	BRCF8	Bearing, CF8	1	

REF. NO.	PART NO.	DESCRIPTION	Q'TY	REMARKS
36	BRNAST6	Bearing, Nast6 (For 850W~1650W)	1	
38	MB0806	Metal Bushing, 0806	6	
41	KYA050510	Key, 5×5×10	1	
47	HBS0516N	HBS, M5×16 (N)	2	
	HBS0516S	HBS, M5×16 (Stainless Steel Model)	2	
49	HBS0616N	HBS, M6×16 (N)(For 400H~800H)	2	
50	HBS0620N	HBS, M6×20 (N)	1	
51	HBS0630N	HBS, M6×30 (N)	5	
52	HBS0830N	HBS, M8×30 (N)	2	
56	THS0612N	THS, M6×12 (N)(Only 1000H)	2	
	THS0612S	THS, M6×12 (Stainless Steel Model)(Only 1000H)	2	
57	THS0625N	THS, M6×25 (N)(For 850W~1650W)	1	
58	THS0630N	THS, M6×30 (N)(For 400H/500H)	4	
		THS, M6×30 (N)(For 600H)	6	
		THS, M6×30 (N)(For 800H/1000H)	8	
	THS0630S	THS, M6×30 (Stainless Steel Model) (For 400H/500H)	4	
		THS, M6×30 (Stainless Steel Model) (For 600H)	6	
		THS, M6×30 (Stainless Steel Model) (For 800H/1000H)	8	
61	HN06	HN, M6 (For 400H/500H)	14	
		HN, M6 (For 600H)	16	
		HN, M6 (For 800H/1000H)	18	
62	HSS0506GN	HSS, M5×6 (G)(N)	2	
63	HSS0608GN	HSS, M6×8 (G)(N)	1	
66	SW05	SW, M5	2	
	SW05S	SW, M5 (Stainless Steel Model)	2	
67	SW06	SW, M6	17~21	
68	SW08	SW, M8	3	
72	PW06A	PW, M6 (A)(For 550W/650W)	19	
		PW, M6 (A)(For 850W~1650W)	21	

2-2 BANDWAY GROUP M7-2-200002 M7-2-200012

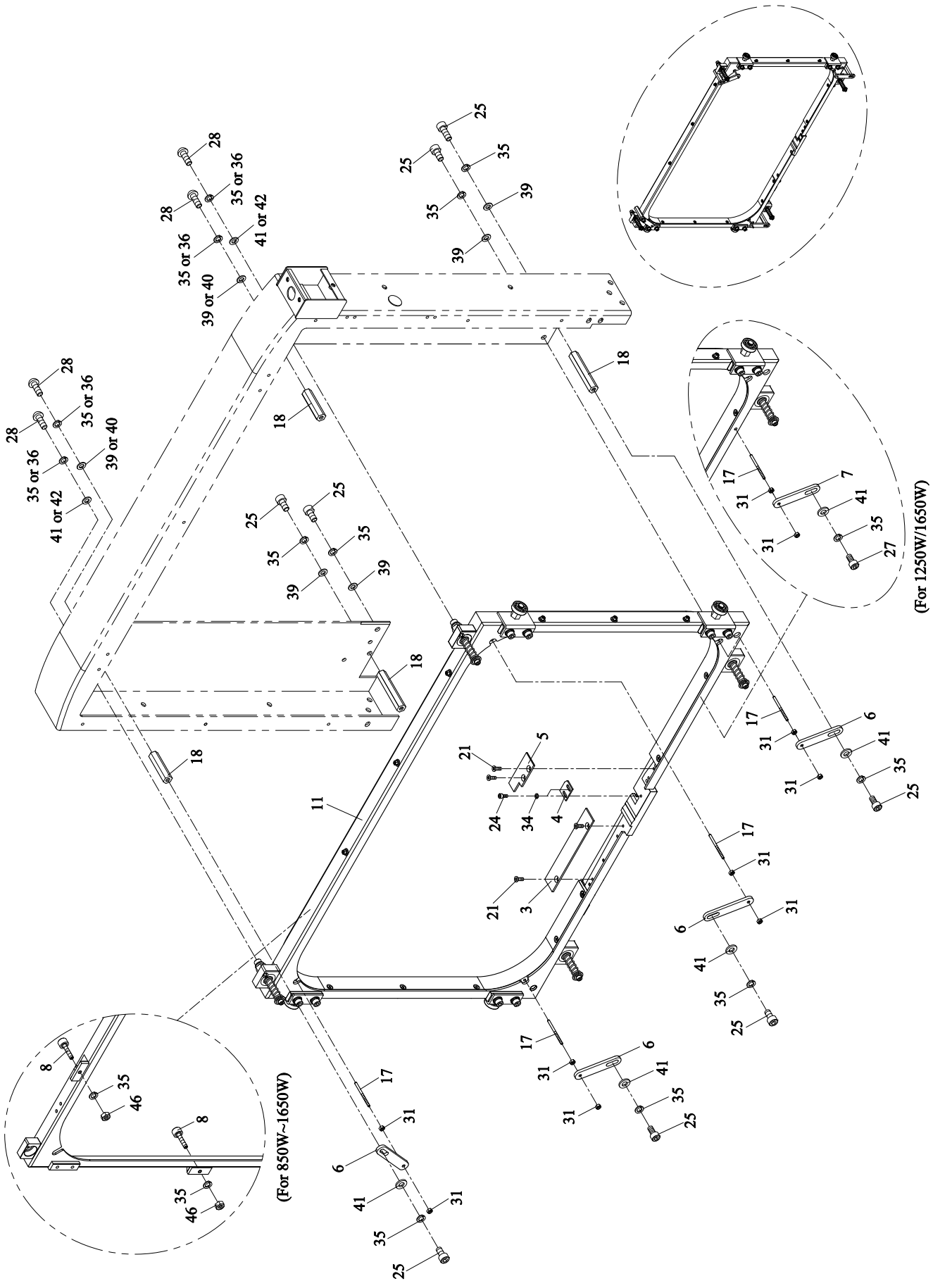

2-2 BANDWAY GROUP M7-2-200002 M7-2-200012

REF. NO.	PART NO.	DESCRIPTION	Q'TY	REMARKS
	M7-2-200002	Bandway Group (For 5-6mm)	1	
	M7-2-200002S	Bandway Group (Stainless Steel Model) (For 5-6mm)	1	
	M7-2-200012	Bandway Group (For 9mm)	1	
	M7-2-200012S	Bandway Group (Stainless Steel Model) (For 9mm)	1	
3	M7-2-201300	Cover (L)	1	
	M7-2-201300S	Cover (L)(Stainless Steel Model)	1	
4	M7-2-201400	Adjusting Plate	1	
	M7-2-201400EN	Adjusting Plate (Stainless Steel Model)	1	
5	M7-2-201500	Cover (R)	1	
	M7-2-201500S	Cover (R)(Stainless Steel Model)	1	
6	M7-2-201710	Plate	4	
7	M7-2-201720	Plate (For 1250W/1650W)	1	
8	M7-2-201801	Bumper Screw (For 850W~1650W)	4~12	
11	M7-2-210002	Strap Track Frame Ass'y (For 5-6mm)	1	SEE PAGE C53
	M7-2-210002S	Strap Track Frame Ass'y (Stainless Steel Model)(For 5-6mm)	1	
	M7-2-210012	Strap Track Frame Ass'y (For 9mm)	1	
	M7-2-210012S	Strap Track Frame Ass'y (Stainless Steel Model)(For 9mm)	1	
17	T7-2-10210	Pin (For 550W~1050W)	4	
		Pin (For 1250W/1650W)	5	
	T7-2-10210S	Pin (Stainless Steel Model)(For 550W~1050W) (Option)	4	
		Pin (Stainless Steel Model) (For 1250W/1650W)(Option)	5	
18	M7-2-201900	Tube	4	
21	FMS0410N	FMS, M4×10 (N)	4	
	FMS0410S	FMS, M4×10 (Stainless Steel Model)	4	
24	HBS0408N	HBS, M4×8 (N)	2	
	HBS0408S	HBS, M4×8 (Stainless Steel Model)	2	
25	HBS0616N	HBS, M6×16 (N)	8	
27	HBS0612N	HBS, M6×12 (N)(For 1250W/1650W)	1	
28	THS0616N	THS, M6×16 (N)	4	
	THS0616S	THS, M6×16 (Stainless Steel Model)	4	
31	NTE03	NTE, M3 (For 550W~1050W)	8	
		NTE, M3 (For 1250W/1650W)	10	
34	SW04	SW, M4	2	
	SW04S	SW, M4 (Stainless Steel Model)	2	
35	SW06	SW, M6 (For 550W/650W)	12	
		SW, M6 (For 850W~1650W)	16~25	

REF. NO.	PART NO.	DESCRIPTION	Q'TY	REMARKS
36	SW06S	SW, M6 (Stainless Steel Model)	4	
39	PW06A	PW, M6 (A)	6	
40	PW06AS	PW, M6 (A)(Stainless Steel Model)	2	
41	PW06C	PW, M6 (C)(For 550W~1050W)	6	
		PW, M6 (C)(For 1250W/1650W)	7	
42	PW06CS	PW, M6 (C)(Stainless Steel Model)	2	
46	HN06	HN, M6 (For 850W~1650W)	4~12	

2-2-1 STRAP TRACK FRAME ASS'Y M7-2-210002 M7-2-210012

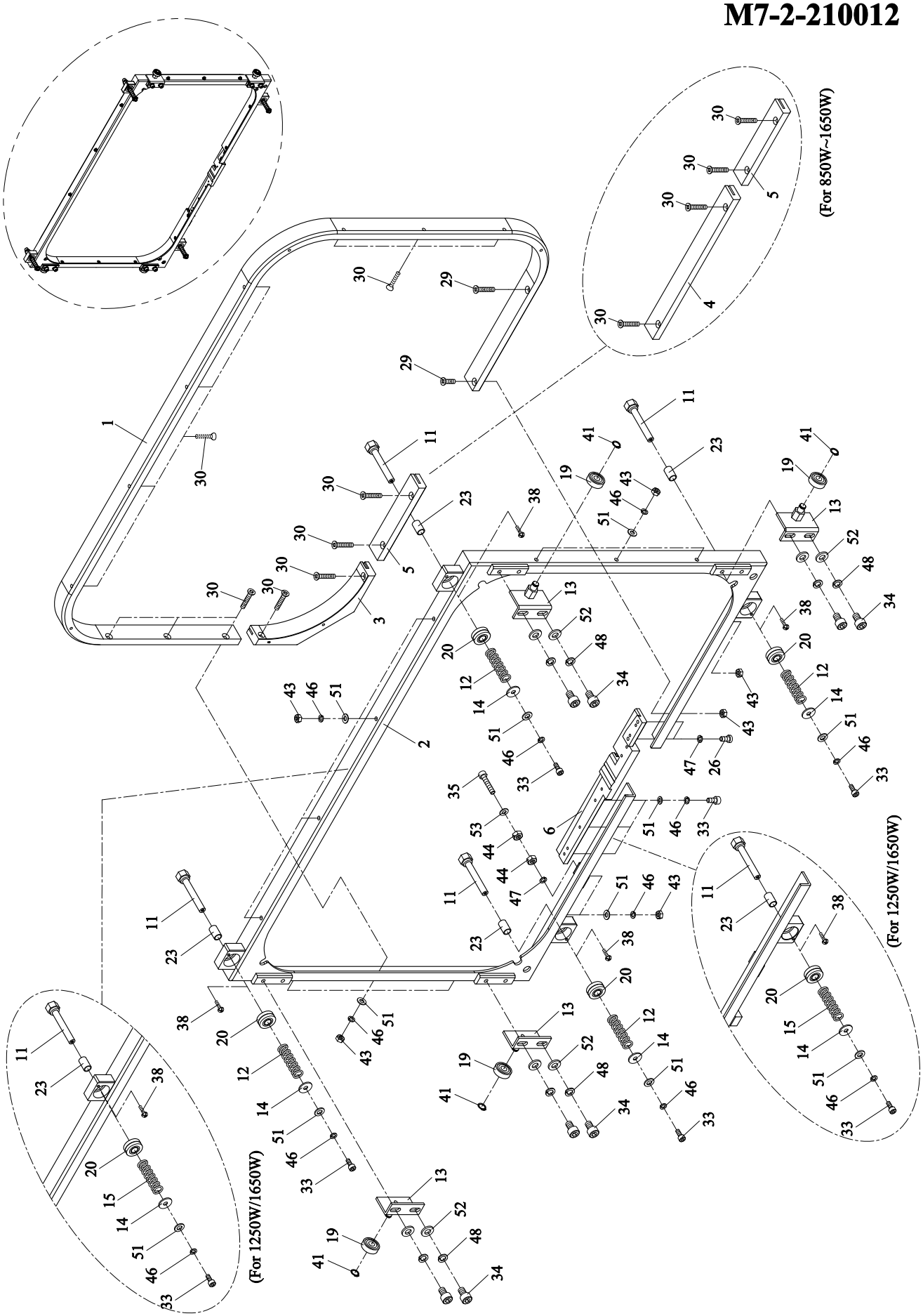

2-2-1 STRAP TRACK FRAME ASS'Y M7-2-210002 M7-2-210012

REF. NO.	PART NO.	DESCRIPTION	Q'TY	REMARKS
	M7-2-210002	Strap Track Frame Ass'y (For 5-6mm)	1	
	M7-2-210002S	Strap Track Frame Ass'y (Stainless Steel Model)(For 5-6mm)	1	
	M7-2-210012	Strap Track Frame Ass'y (For 9mm)	1	
	M7-2-210012S	Strap Track Frame Ass'y (Stainless Steel Model)(For 9mm)	1	
1	M7-2-201101	Strap Track (For 5-6mm)	1	
	M7-2-201111	Strap Track (For 9mm)	1	
2	M7-2-201201	Strap Track Frame	1	
	M7-2-201201S	Strap Track Frame (Stainless Steel Model)	1	
3	M7-2-211100	Corner Strap Track (For 5-6mm)	1	
	M7-2-211110	Corner Strap Track (For 9mm)	1	
4	M7-2-211221	Strap Track (Left)(2)(For 5-6mm, 850W)	1	
	M7-2-211231	Strap Track (Left)(2)(For 5-6mm, 1050W)	1	
	M7-2-211241	Strap Track (Left)(2)(For 5-6mm, 1250W)	1	
	M7-2-211251	Strap Track (Left)(2)(For 5-6mm, 1650W)	1	
	M7-2-211321	Strap Track (Left)(2)(For 9mm, 850W)	1	
	M7-2-211331	Strap Track (Left)(2)(For 9mm, 1050W)	1	
	M7-2-211341	Strap Track (Left)(2)(For 9mm, 1250W)	1	
	M7-2-211351	Strap Track (Left)(2)(For 9mm, 1650W)	1	
5	M7-2-211201	Strap Track (Left)(1)(For 5-6mm, 550W/850W/1050W)	1	
	M7-2-211211	Strap Track (Left)(1)(For 5-6mm, 650W)	1	
	M7-2-211600	Strap Track (Left)(1)(For 5-6mm, 1250W/1650W)	1	
	M7-2-211301	Strap Track (Left)(1)(For 9mm, 550W/850W/1050W)	1	
	M7-2-211311	Strap Track (Left)(1)(For 9mm, 650W)	1	
	M7-2-211610	Strap Track (Left)(1)(For 9mm, 1250W/1650W)	1	
6	M7-2-201600	Track Frame Connector (For 5-6mm)	1	
	M7-2-201600S	Track Frame Connector (Stainless Steel Model)(For 5-6mm)	1	
	M7-2-201610	Track Frame Connector (For 9mm)	1	
	M7-2-201610S	Track Frame Connector (Stainless Steel Model)(For 9mm)	1	
11	T7-2-20160	Shaft (For 550W~1050W)	4	
		Shaft (For 1250W/1650W)	6	
	T7-2-20160S	Shaft (Stainless Steel Model) (For 550W~1050W)(Option)	4	
		Shaft (Stainless Steel Model) (For 1250W/1650W)(Option)	6	

2-2-1 STRAP TRACK FRAME ASS'Y M7-2-210002 M7-2-210012

REF. NO.	PART NO.	DESCRIPTION	Q'TY	REMARKS
12	T7-2-20172	Spring	4	
	T7-2-20172S	Spring (Stainless Steel Model)(Option)	4	
13	T7-2-20180	Bracket	4	
14	T7-2-20380	Washer (φ5× φ 14)(For 550W~1050W)	4	
		Washer (φ5× φ 14)(For 1250W/1650W)	6	
15	T7-2-20171	Spring (For 1250W/1650W)	2	
	T7-2-20171S	Spring (Stainless Steel Model) (For 1250W/1650W)(Option)	2	
19	BR608ZZ	Bearing, 608ZZ	4	
20	BRPB8	Bearing, PB8 (For 550W~1050W)	4	
		Bearing, PB8 (For 1250W/1650W)	6	
23	MB0816	Metal Bushing, 0816 (For 550W~1050W)	4	
		Metal Bushing, 0816 (For 1250W/1650W)	6	
26	HBL0512	HBL, M5×12	2	
29	FMS0420N	FMS, M4×20 (N)	2	
	FMS0420S	FMS, M4×20 (Stainless Steel Model)	2	
30	FMS0425	FMS, M4×25	16~25	
	FMS0425S	FMS, M4×25 (Stainless Steel Model)	16~25	
33	HBS0412N	HBS, M4×12 (N)(For 550W~1050W)	7	
		HBS, M4×12 (N)(For 1250W/1650W)	9	
34	HBS0612N	HBS, M6×12 (N)	8	
35	HBS0540N	HBS, M5×40 (N)(Without SQ6 Option)	1	
38	TMS0408N	TMS, M4×8 (N)(For 550W~1050W)	4	
		TMS, M4×8 (N)(For 1250W/1650W)	6	
41	SR08	Stop Ring, S-8	4	
43	HN04	HN, M4	18~27	
44	HN05	HN, M5 (Without SQ6 Option)	2	
46	SW04	SW, M4	23~33	
47	SW05	SW, M5	2	
		SW, M5 (Without SQ6 Option)	3	
48	SW06	SW, M6	8	
51	PW04	PW, M4	23~33	
52	PW06C	PW, M6 (C)	8	
53	PW05	PW, M5 (Without SQ6 Option)	1	

2-3 ARCH COVER GROUP M7-2-300001

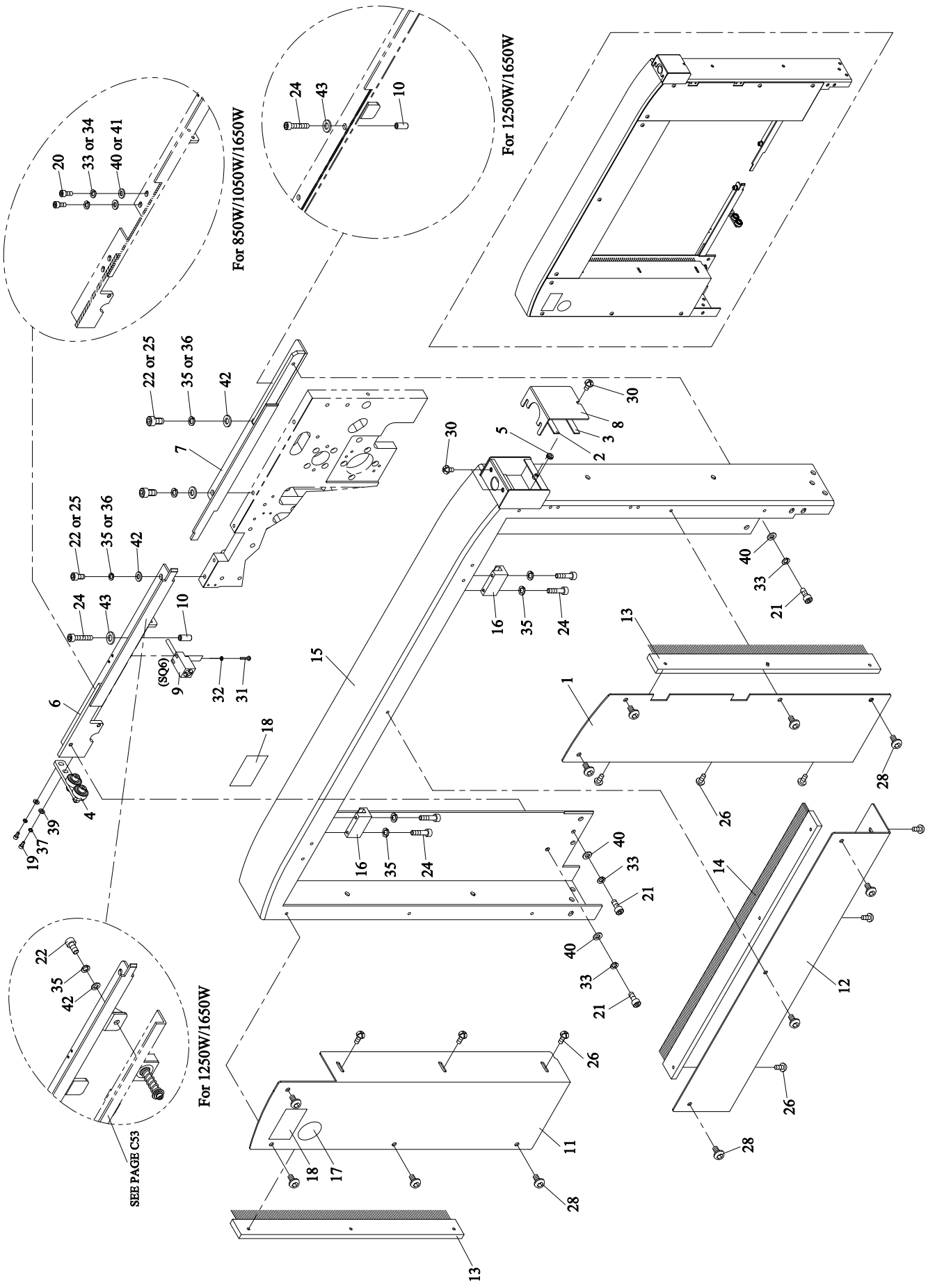

2-3 ARCH COVER GROUP M7-2-300001

REF. NO.	PART NO.	DESCRIPTION	Q'TY	REMARKS
	M7-2-300001	Arch Cover Group	1	
	M7-2-300001S	Arch Cover Group (Stainless Steel Model)	1	
1	M7-2-301101	Arch Cover RH (For 400H)	1	
	M7-2-301101S	Arch Cover RH (Stainless Steel Model) (For 400H)	1	
	M7-2-301111	Arch Cover RH (For 500H)	1	
	M7-2-301111S	Arch Cover RH (Stainless Steel Model) (For 500H)	1	
	M7-2-301121	Arch Cover RH (For 600H)	1	
	M7-2-301121S	Arch Cover RH (Stainless Steel Model) (For 600H)	1	
	M7-2-301131	Arch Cover RH (For 800H)	1	
	M7-2-301131S	Arch Cover RH (Stainless Steel Model) (For 800H)	1	
	M7-2-301141	Arch Cover RH (For 1000H)	1	
	M7-2-301141S	Arch Cover RH (Stainless Steel Model) (For 1000H)	1	
2	FR-12006300	Foam Rubber	1	
3	FR-12006301	Foam Rubber	1	
4	M7-2-310000	Block Ass'y (For 550W~1050W)	1	SEE PAGE C63
5	T5-4-10580	Grommet	1	
6	M7-2-101100	Guide LH (For 550W)	1	
	M7-2-101100S	Guide LH (Stainless Steel Model)(For 550W)	1	
	M7-2-101110	Guide LH (For 650W)	1	
	M7-2-101110S	Guide LH (Stainless Steel Model)(For 650W)	1	
	M7-2-101120	Guide LH (For 850W)	1	
	M7-2-101120S	Guide LH (Stainless Steel Model)(For 850W)	1	
	M7-2-101130	Guide LH (For 1050W)	1	
	M7-2-101130S	Guide LH (Stainless Steel Model)(For 1050W)	1	
	M7-2-101140	Guide LH (For 1250W)	1	
	M7-2-101140S	Guide LH (Stainless Steel Model)(For 1250W)	1	
	M7-2-101150	Guide LH (For 1650W)	1	
	M7-2-101150S	Guide LH (Stainless Steel Model)(For 1650W)	1	
7	M7-2-101200	Guide RH (For 550W)	1	
	M7-2-101200S	Guide RH (Stainless Steel Model)(For 550W)	1	
	M7-2-101210	Guide RH (For 650W~1050W)	1	
	M7-2-101210S	Guide RH (Stainless Steel Model) (For 650W~1050W)	1	
	M7-2-101230	Guide RH (For 1250W/1650W)	1	
	M7-2-101230S	Guide RH (Stainless Steel Model) (For 1250W/1650W)	1	
8	M7-2-301800	Cover	1	
	M7-2-301800S	Cover (Stainless Steel Model)	1	
9	MV-6-20220	Proximity Sensor (X19)(SQ6)(Option)	1	SEE PAGE C153

2-3 ARCH COVER GROUP M7-2-300001

REF. NO.	PART NO.	DESCRIPTION	Q'TY	REMARKS
10	T7-2-20470	Support Rod (For 1250W/1650W)	2	
11	M7-2-301400	Arch Cover LH (For 400H)	1	
	M7-2-301400S	Arch Cover LH (Stainless Steel Model) (For 400H)	1	
	M7-2-301410	Arch Cover LH (For 500H)	1	
	M7-2-301410S	Arch Cover LH (Stainless Steel Model) (For 500H)	1	
	M7-2-301420	Arch Cover LH (For 600H)	1	
	M7-2-301420S	Arch Cover LH (Stainless Steel Model) (For 600H)	1	
	M7-2-301430	Arch Cover LH (For 800H)	1	
	M7-2-301430S	Arch Cover LH (Stainless Steel Model) (For 800H)	1	
	M7-2-301440	Arch Cover LH (For 1000H)	1	
	M7-2-301440S	Arch Cover LH (Stainless Steel Model) (For 1000H)	1	
12	M7-2-301500	Arch Cover (Upper)(For 550W)	1	
	M7-2-301500S	Arch Cover (Upper)(Stainless Steel Model) (For 550W)	1	
	M7-2-301510	Arch Cover (Upper)(For 650W)	1	
	M7-2-301510S	Arch Cover (Upper)(Stainless Steel Model) (For 650W)	1	
	M7-2-301520	Arch Cover (Upper)(For 850W)	1	
	M7-2-301520S	Arch Cover (Upper)(Stainless Steel Model) (For 850W)	1	
	M7-2-301530	Arch Cover (Upper)(For 1050W)	1	
	M7-2-301530S	Arch Cover (Upper)(Stainless Steel Model) (For 1050W)	1	
	M7-2-301540	Arch Cover (Upper)(For 1250W)	1	
	M7-2-301540S	Arch Cover (Upper)(Stainless Steel Model) (For 1250W)	1	
	M7-2-301550	Arch Cover (Upper)(For 1650W)	1	
	M7-2-301550S	Arch Cover (Upper)(Stainless Steel Model) (For 1650W)	1	
13	M7-2-304100	Brush (Side)(For 400H)	2	
	M7-2-304110	Brush (Side)(For 500H)	2	
	M7-2-304120	Brush (Side)(For 600H)	2	
	M7-2-304140	Brush (Side)(For 800H)	2	
	M7-2-304150	Brush (Side)(For 1000H)	2	
14	M7-2-304000	Brush (Upper)(For 550W)	1	
	M7-2-304010	Brush (Upper)(For 650W)	1	
	M7-2-304020	Brush (Upper)(For 850W)	1	
	M7-2-304030	Brush (Upper)(For 1050W)	1	
	M7-2-304040	Brush (Upper)(For 1250W)	2	
	M7-2-304050	Brush (Upper)(For 1650W)	2	

2-3 ARCH COVER GROUP M7-2-300001

REF. NO.	PART NO.	DESCRIPTION	Q'TY	REMARKS
15	M7-2-301600	Arch	1	
	M7-2-301600S	Arch (Stainless Steel Model)	1	
16	M7-2-301700	Block (For 850W~1650W)	2	
17	LA-40170	Label	1	
18	LA-40005	Label	2	
19	HBS0412N	HBS, M4×12 (N)(For 550W~1050W)	2	
20	HBS0508N	HBS, M5×8 (N)(For 850W/1050W/1650W)	2	
	HBS0508S	HBS, M5×8 (Stainless Steel Model) (For 850W/1050W/1650W)	2	
21	HBS0512N	HBS, M5×12 (N)	3	
	HBS0512S	HBS, M5×12 (Stainless Steel Model)	3	
22	HBS0616N	HBS, M6×16 (N)(For 550W~1050W)	3	
		HBS, M6×16 (N)(For 1250W/1650W)	4	
24	HBS0640HN	HBS, M6×40 (H)(N)(For 850W~1650W)	4	
		HBS, M6×40 (H)(N)(For 1250W/1650W)	6	
25	HBS0616S	HBS, M6×16 (Stainless Steel Model)	3	
26	TTP0412BN	TTP, M4×12 (B)(N)(For 550W~1050W)	9	
		TTP, M4×12 (B)(N)(For 1250W/1650W)	12	
	TTP0412BS	TTP, M4×12 (B)(Stainless Steel Model) (For 550W~1050W)	9	
		TTP, M4×12 (B)(Stainless Steel Model) (For 1250W/1650W)	12	
28	THS0508N	THS, M5×8 (N)(Only 550W×400H)	11	
		THS, M5×8 (N)	12	
	THS0508S	THS, M5×8 (Stainless Steel Model) (Only 550W×400H)	11	
		THS, M5×8 (Stainless Steel Model)	12	
30	TMS0406	TMS, M4×6	3	
	TMS0406S	TMS, M4×6 (Stainless Steel Model)	3	
31	PMS0316	PMS, M3×16 (Option)	2	
32	SW03	SW, M3 (Option)	2	
33	SW05	SW, M5 (For 550W/650W/1250W)	3	
		SW, M5 (For 850W/1050W/1650W)	5	
34	SW05S	SW, M5 (Stainless Steel Model) (For 850W/1050W/1650W)	2	
35	SW06	SW, M6 (For 550W/650W)	3	
		SW, M6 (For 850W/1050W)	7	
		SW, M6 (For 1250W/1650W)	8	
36	SW06S	SW, M6 (Stainless Steel Model)	3	
37	SW04	SW, M4 (For 550W~1050W)	2	

2-3 ARCH COVER GROUP M7-2-300001

REF. NO.	PART NO.	DESCRIPTION	Q'TY	REMARKS
39	PW04	PW, M4 (For 550W~1050W)	2	
40	PW05	PW, M5 (For 550W/650W/1250W)	3	
		PW, M5 (For 850W/1050W/1650W)	5	
41	PW05S	PW, M5 (Stainless Steel Model) (For 850W/1050W/1650W)	2	
42	PW06A	PW, M6 (A)(For 550W~1050W)	3	
		PW, M6 (A)(For 1250W/1650W)	4	
43	PW06B	PW, M6 (B)(For 1250W/1650W)	2	
	PW06BS	PW, M6 (B)(Stainless Steel Model) (For 1250W/1650W)	2	

2-3-1 **BLOCK ASS'Y** **M7-2-310000**

(For 550W~1050W)

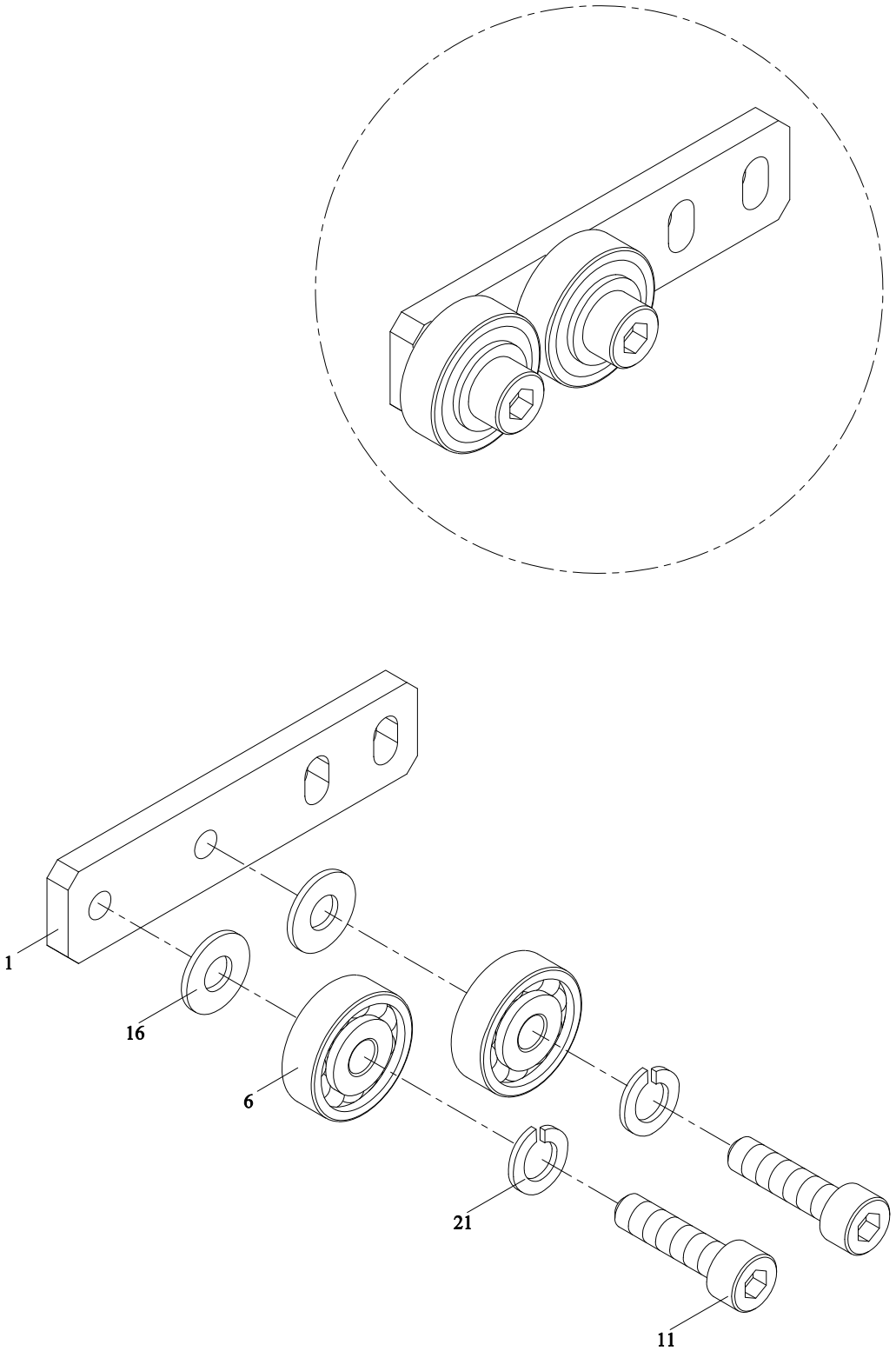

2-3-1 BLOCK ASS'Y (For 550W~1050W) M7-2-310000

REF. NO.	PART NO.	DESCRIPTION	Q'TY	REMARKS
1	M7-2-301200	Block	1	
6	BR635ZZ	Bearing, 635ZZ	2	
11	HBS0516N	HBS, M5×16 (N)	2	
16	PW05	PW, M5	2	
21	SW05	SW, M5	2	

2-4-1 CONNECTING ROD GROUP M7-2-400010
(For 850W/1050W)

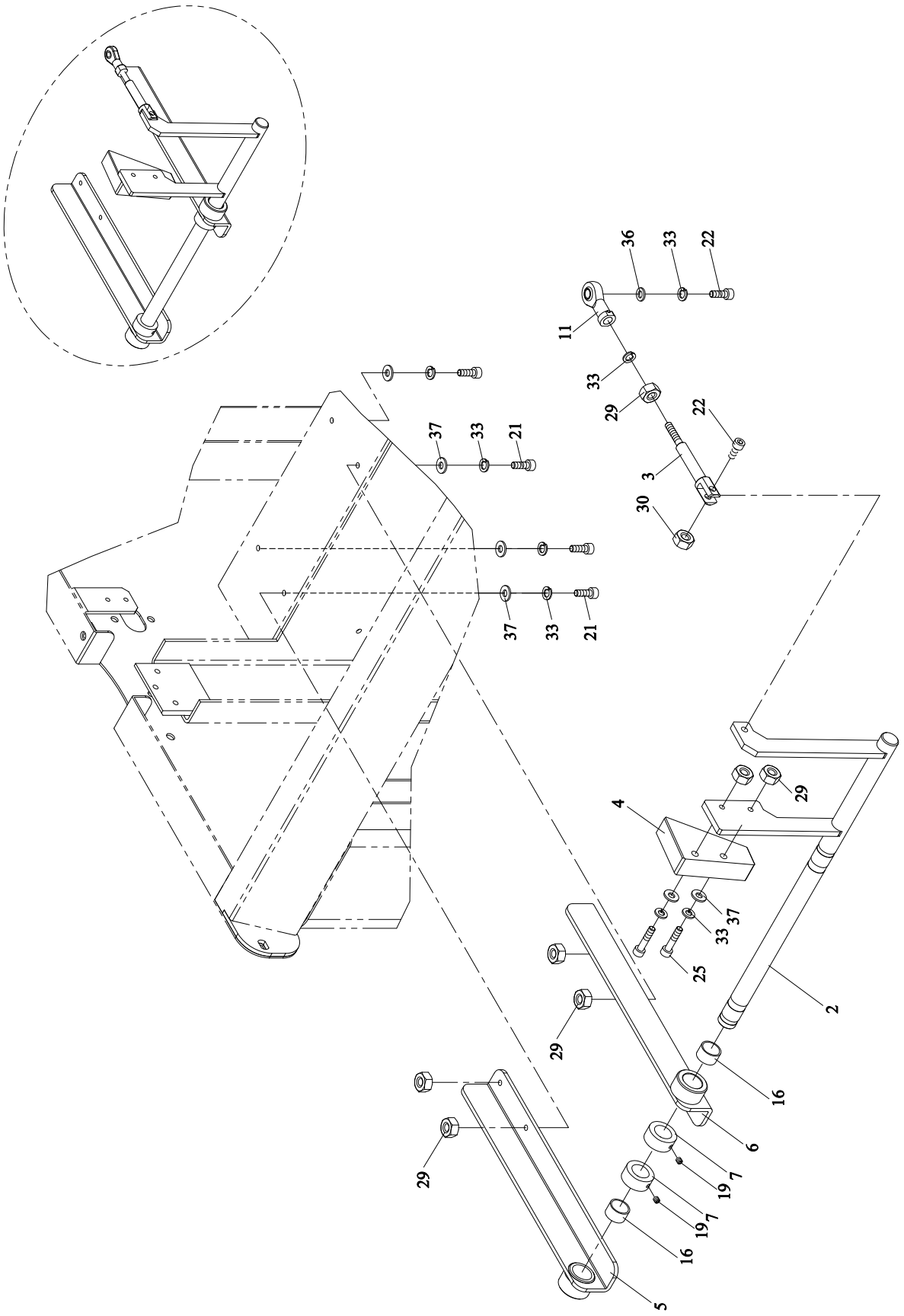

2-4-1 CONNECTING ROD GROUP (For 850W/1050W) M7-2-400010

REF. NO.	PART NO.	DESCRIPTION	Q'TY	REMARKS
2	M7-2-401210	Connecting Rod	1	
3	M7-2-401300	Connector	1	
4	M7-2-401400	Slant Block	1	
5	M7-2-401500	Bracket (Left)	1	
6	M7-2-401600	Bracket (Right)	1	
7	M7-2-401700	Collar	2	
11	T7-2-20560	Swivel Head, NHS06	1	
16	MB1715	Metal Bushing, 1715	2	
19	HSS0506GN	HSS, M5×6 (G)(N)	2	
21	HBS0616N	HBS, M6×16 (N)	4	
22	HBS0620N	HBS, M6×20 (N)	2	
25	HBS0635HN	HBS, M6×35 (H)(N)	2	
29	HN06	HN, M6	7	
30	NTE06	NTE, M6	1	
33	SW06	SW, M6	8	
36	PW06A	PW, M6 (A)	2	
37	PW06C	PW, M6 (C)	6	

2-4-2 CONNECTING ROD GROUP M7-2-400000
(For 1250W/1650W)

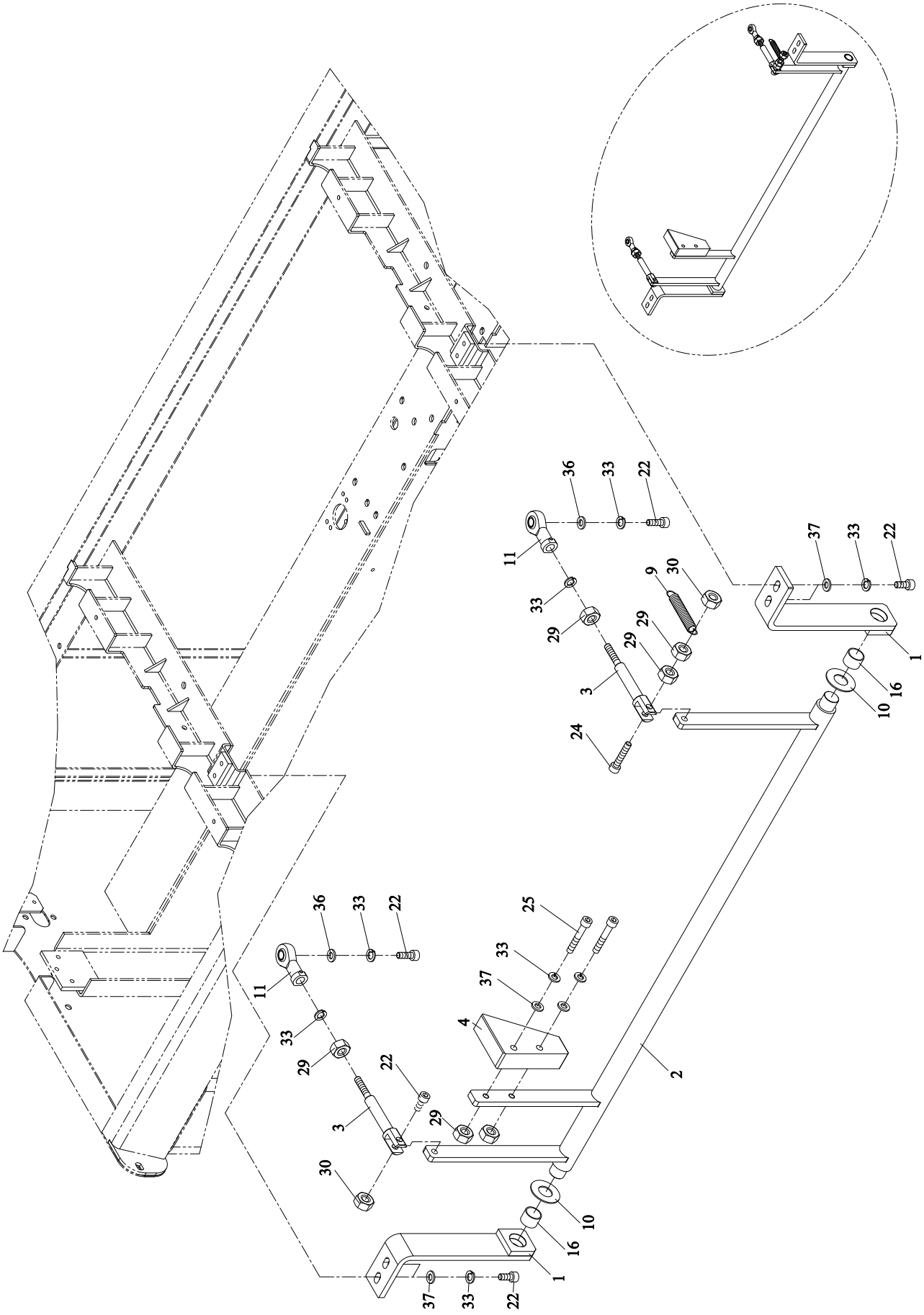

2-4-2 CONNECTING ROD GROUP (For 1250W/1650W) M7-2-400000

REF. NO.	PART NO.	DESCRIPTION	Q'TY	REMARKS
1	M7-2-401100	Bracket	2	
2	M7-2-401200	Connecting Rod	1	
3	M7-2-401300	Connector	2	
4	M7-2-401400	Slant Block	1	
9	TC-025	Spring	1	
10	H42-1227	Washer	2	
11	T7-2-20560	Swivel Head, NHS06	2	
16	MB1512	Metal Bushing, 1512	2	
22	HBS0620N	HBS, M6×20 (N)	7	
24	HBS0630N	HBS, M6×30 (N)	1	
25	HBS0635HN	HBS, M6×35 (H)(N)	2	
29	HN06	HN, M6	6	
30	NTE06	NTE, M6	2	
33	SW06	SW, M6	10	
36	PW06A	PW, M6 (A)	2	
37	PW06C	PW, M6 (C)	6	

3 ACCUMULATOR UNIT M7-3-900002 M7-3-900012

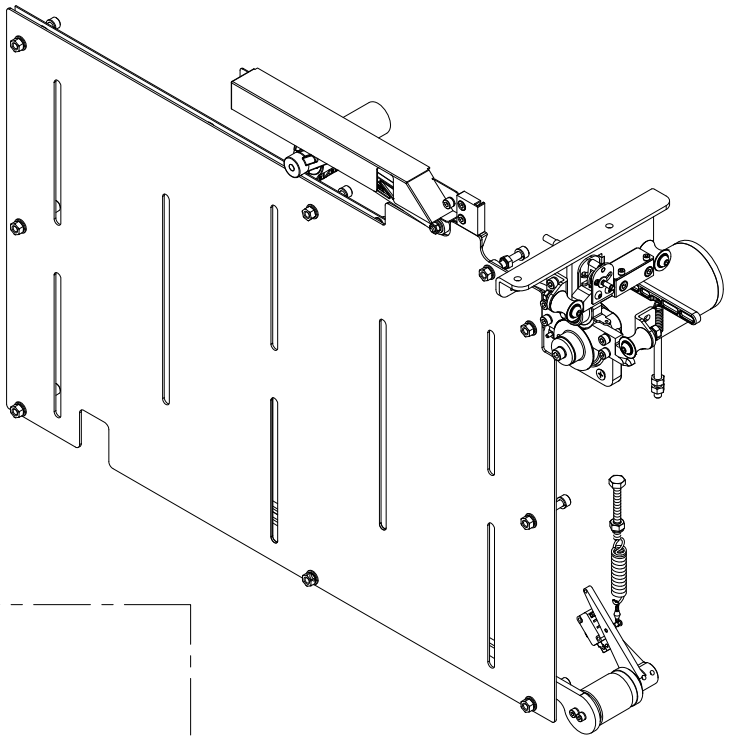

1

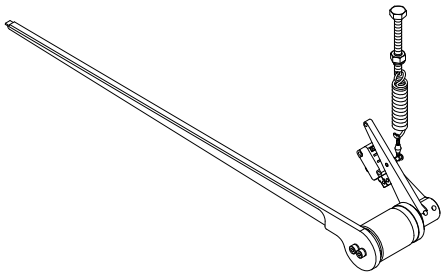

2

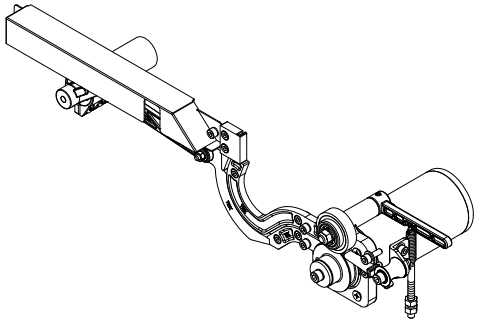

3

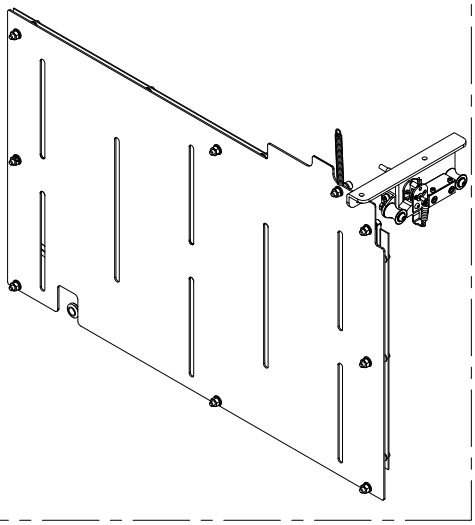

3 ACCUMULATOR UNIT M7-3-900002 M7-3-900012

REF. NO.	PART NO.	DESCRIPTION	Q'TY	REMARKS
	M7-3-900002	Accumulator Unit (For 5-6mm, 550W)	1	
	M7-3-900002S	Accumulator Unit (Stainless Steel Model) (For 5-6mm, 550W)	1	
	M7-3-900012	Accumulator Unit (For 9mm, 550W)	1	
	M7-3-900012S	Accumulator Unit (Stainless Steel Model) (For 9mm, 550W)	1	
	M7-3-900032	Accumulator Unit (For 5-6mm, 650W~1050W)	1	
	M7-3-900032S	Accumulator Unit (Stainless Steel Model) (For 5-6mm, 650W~1050W)	1	
	M7-3-900042	Accumulator Unit (For 9mm, 650W~1050W)	1	
	M7-3-900042S	Accumulator Unit (Stainless Steel Model) (For 9mm, 650W~1050W)	1	
	M7-3-900053	Accumulator Unit (For 5-6mm, 1250W/1650W)	1	
	M7-3-900053S	Accumulator Unit (Stainless Steel Model) (For 5-6mm, 1250W/1650W)	1	
	M7-3-900063	Accumulator Unit (For 9mm, 1250W/1650W)	1	
	M7-3-900063S	Accumulator Unit (Stainless Steel Model) (For 9mm, 1250W/1650W)	1	
1	M7-3-100000	Strap Amount Control Group (For 5-6mm, 550W~1050W)	1	SEE PAGE C71
	M7-3-100010	Strap Amount Control Group (For 9mm, 550W~1050W)	1	
	M7-3-100030	Strap Amount Control Group (For 5-6mm, 1250W/1650W)	1	
	M7-3-100040	Strap Amount Control Group (For 9mm, 1250W/1650W)	1	
2	M7-3-200001	Auto Strap Feeding Group (For 5-6mm, 550W~1050W)	1	SEE PAGE C73
	M7-3-200011	Auto Strap Feeding Group (For 9mm, 550W~1050W)	1	
	M7-3-200031	Auto Strap Feeding Group (For 5-6mm, 1250W/1650W)	1	
	M7-3-200041	Auto Strap Feeding Group (For 9mm, 1250W/1650W)	1	
3	M7-3-300002	Accumulator Box Group (For 5-6mm, 550W)	1	SEE PAGE C85
	M7-3-300002S	Accumulator Box Group (Stainless Steel Model)(For 5-6mm, 550W)	1	
	M7-3-300012	Accumulator Box Group (For 9mm, 550W)	1	
	M7-3-300012S	Accumulator Box Group (Stainless Steel Model)(For 9mm, 550W)	1	

3 ACCUMULATOR UNIT M7-3-900002 M7-3-900012

REF. NO.	PART NO.	DESCRIPTION	Q'TY	REMARKS
	M7-3-300032	Accumulator Box Group (For 5-6mm, 650W~1050W)	1	
	M7-3-300032S	Accumulator Box Group (Stainless Steel Model)(For 5-6mm, 650W~1050W)	1	
	M7-3-300042	Accumulator Box Group (For 9mm, 650W~1050W)	1	
	M7-3-300042S	Accumulator Box Group (Stainless Steel Model)(For 9mm, 650W~1050W)	1	
	M7-3-300053	Accumulator Box Group (For 5-6mm, 1250W/1650W)	1	SEE PAGE C89
	M7-3-300053S	Accumulator Box Group (Stainless Steel Model)(For 5-6mm, 1250W/1650W)	1	
	M7-3-300063	Accumulator Box Group (For 9mm, 1250W/1650W)	1	
	M7-3-300063S	Accumulator Box Group (Stainless Steel Model)(For 9mm, 1250W/1650W)	1	

3-1 STRAP AMOUNT CONTROL GROUP M7-3-100000 M7-3-100010

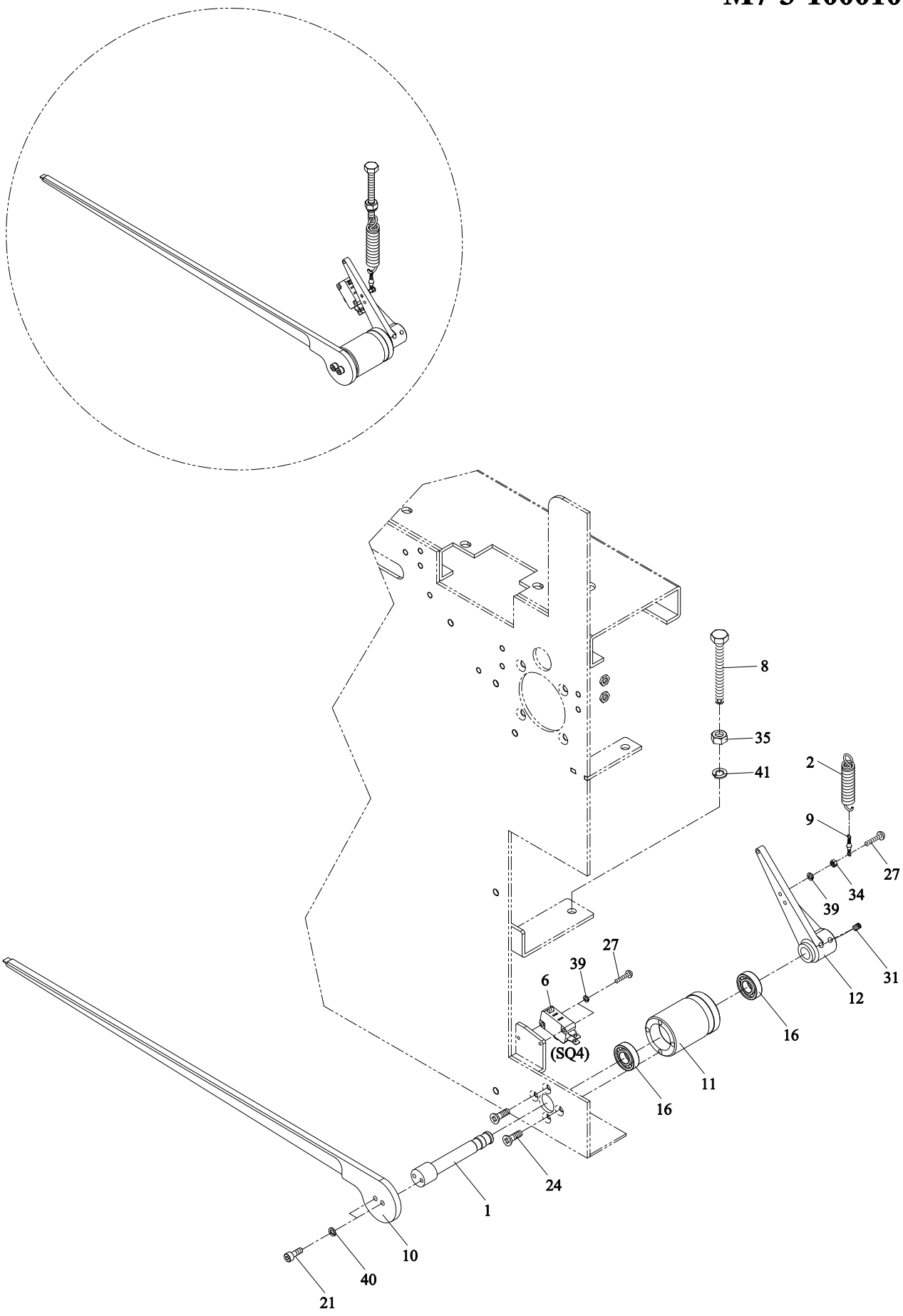

3-1 STRAP AMOUNT CONTROL GROUP M7-3-100000 M7-3-100010

REF. NO.	PART NO.	DESCRIPTION	Q'TY	REMARKS
	M7-3-100000	Strap Amount Control Group (For 5-6mm, 550W~1050W)	1	
	M7-3-100010	Strap Amount Control Group (For 9mm, 550W~1050W)	1	
	M7-3-100030	Strap Amount Control Group (For 5-6mm, 1250W/1650W)	1	
	M7-3-100040	Strap Amount Control Group (For 9mm, 1250W/1650W)	1	
1	T7-3-10150	Shaft	1	
2	M7-3-101200	Spring	1	
6	TF-007	Micro Switch	1	
8	T6-3-10130	Accumulator Adjusting Bolt	1	
9	T6-3-10200	Twist Stopper	1	
10	T7-3-10140	Balance Bar (For 5-6mm, 550W~1050W)	1	
	T7-3-10141	Balance Bar (For 9mm, 550W~1050W)	1	
	M7-3-101310	Balance Bar (For 5-6mm, 1250W/1650W)	1	
	M7-3-101320	Balance Bar (For 9mm, 1250W/1650W)	1	
11	T7-3-10180	Tube	1	
12	T7-3-10200	Sensor Lever	1	
16	BR6900ZZ	Bearing, 6900ZZ	2	
21	HBS0412N	HBS, M4×12 (N)	2	
24	FMS0410N	FMS, M4×10 (N)	4	
27	PMS0316	PMS, M3×16	3	
31	HSS0405GN	HSS, M4×5 (G)(N)	2	
34	HN03	HN, M3	1	
35	HN08	HN, M8	1	
39	SW03	SW, M3	3	
40	SW04	SW, M4	2	
41	SW08	SW, M8	1	

3-2 AUTO STRAP FEEDING GROUP M7-3-200001 M7-3-200011

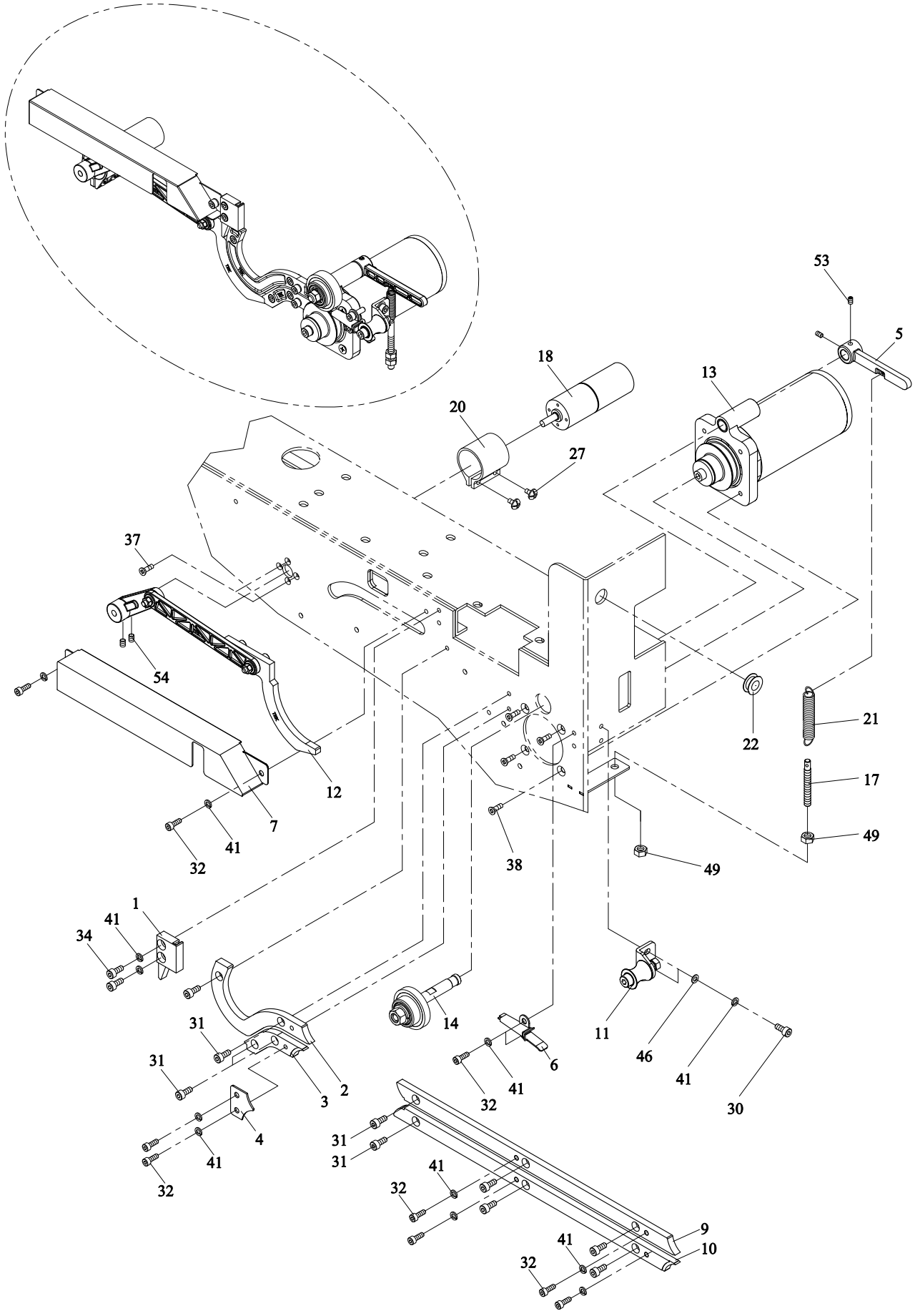

3-2 AUTO STRAP FEEDING GROUP M7-3-200001 M7-3-200011

REF. NO.	PART NO.	DESCRIPTION	Q'TY	REMARKS
	M7-3-200001	Auto Strap Feeding Group (For 5-6mm, 550W~1050W)	1	
	M7-3-200011	Auto Strap Feeding Group (For 9mm, 550W~1050W)	1	
	M7-3-200031	Auto Strap Feeding Group (For 5-6mm, 1250W/1650W)	1	
	M7-3-200041	Auto Strap Feeding Group (For 9mm, 1250W/1650W)	1	
1	M7-3-201100	Guide Block (For 5-6mm)	1	
	M7-3-201110	Guide Block (For 9mm)	1	
2	M7-3-201200	Upper Strap Guide (For 5-6mm)	1	
	M7-3-201210	Upper Strap Guide (For 9mm)	1	
3	M7-3-201300	Lower Strap Guide (For 5-6mm)	1	
	M7-3-201310	Lower Strap Guide (For 9mm)	1	
4	M7-3-201400	Strap Guide Cover (For 550W~1050W)	1	
	M7-3-201420	Strap Guide Cover (For 1250W/1650W)	1	
5	M7-3-201500	Lever	1	
6	M7-3-201601	Inlet Guide (For 5-6mm)	1	
	M7-3-201611	Inlet Guide (For 9mm)	1	
7	M7-3-201700	Cover	1	
9	M7-3-201900	Inlet Strap Guide Center Upper (For 5-6mm, 1250W/1650W)	1	
	M7-3-201910	Inlet Strap Guide Center Upper (For 9mm, 1250W/1650W)	1	
10	M7-3-202000	Inlet Strap Guide Center Lower (For 5-6mm, 1250W/1650W)	1	
	M7-3-202010	Inlet Strap Guide Center Lower (For 9mm, 1250W/1650W)	1	
11	M7-3-210001	Roller Ass'y	1	SEE PAGE C77
12	M7-3-220000	Movable Strap Guide Ass'y (For 5-6mm)	1	SEE PAGE C79
	M7-3-220010	Movable Strap Guide Ass'y (For 9mm)	1	
13	M7-3-230000	M4 Motor Ass'y (For 5-6mm)	1	SEE PAGE C81
	M7-3-230010	M4 Motor Ass'y (For 9mm)	1	
14	T7-3-20080	Assistant Roller Shaft Ass'y (For 5-6mm)	1	SEE PAGE C83
	T7-3-20081	Assistant Roller Shaft Ass'y (For 9mm)	1	
17	M7-1-331500	Spring Hook	1	
18	T6-1-61211	Motor (M5)	1	
20	T6-8-10410	Motor Cover	1	
21	T7-1-70280	Spring	1	
22	T5-4-10580	Grommet	1	

3-2 AUTO STRAP FEEDING GROUP M7-3-200001 M7-3-200011

REF. NO.	PART NO.	DESCRIPTION	Q'TY	REMARKS
27	TMS0408N	TMS, M4×8 (N)	2	
30	HBS0516N	HBS, M5×16 (N)	2	
31	HBS0508N	HBS, M5×8 (N)(For 5-6mm, 550W~1050W)	4	
		HBS, M5×8 (N)(For 5-6mm, 1250W/1650W)	10	
	HBS0512N	HBS, M5×12 (N)(For 9mm, 550W~1050W)	4	
		HBS, M5×12 (N)(For 9mm, 1250W/1650W)	10	
32	HBS0508N	HBS, M5×8 (N)(For 550W~1050W)	6	
		HBS, M5×8 (N)(For 1250W/1650W)	10	
34	HBS0510N	HBS, M5×10 (N)	2	
37	FMS0410N	FMS, M4×10 (N)	4	
38	FMS0512	FMS, M5×12	4	
41	SW05	SW, M5 (For 550W~1050W)	10	
		SW, M5 (For 1250W/1650W)	14	
46	PW05	PW, M5	2	
49	HN06	HN, M6	2	
53	HSS0506GN	HSS, M5×6 (G)(N)	2	
54	HSS0508GN	HSS, M5×8 (G)(N)	2	

3-2-1 **ROLLER ASS'Y** **M7-3-210001**

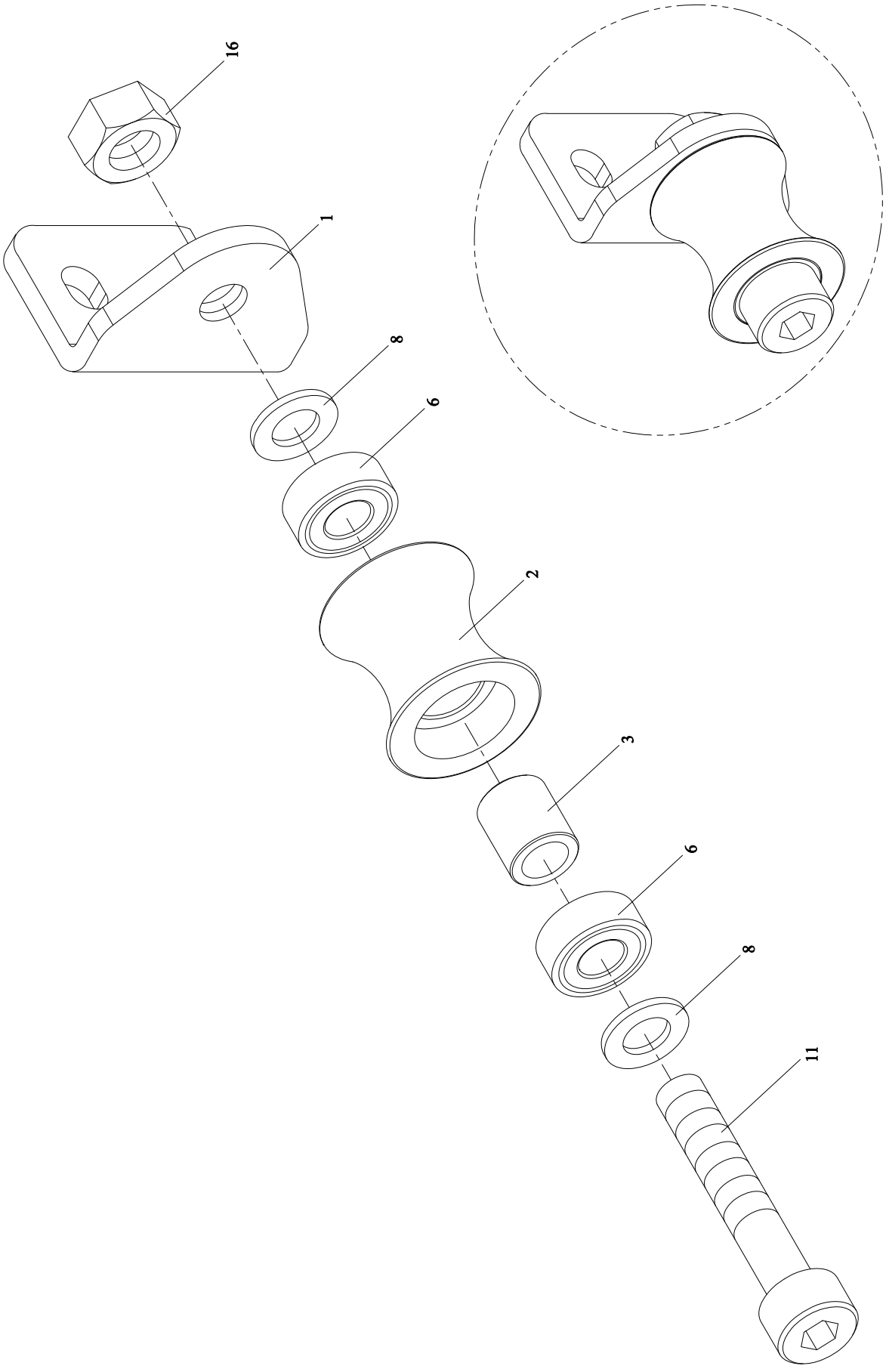

3-2-1 ROLLER ASS'Y M7-3-210001

REF. NO.	PART NO.	DESCRIPTION	Q'TY	REMARKS
1	M7-3-211101	Bracket	1	
2	M7-3-211200	Roller	1	
3	M7-3-211300	Collar	1	
6	BR686ZZ	Bearing, 686ZZ	2	
8	H44-10950	Washer	2	
11	HBS0630HN	HBS, M6×30 (H)(N)	1	
16	HN06	HN, M6	1	

3-2-2 MOVABLE STRAP GUIDE ASS'Y M7-3-220000 M7-3-220010

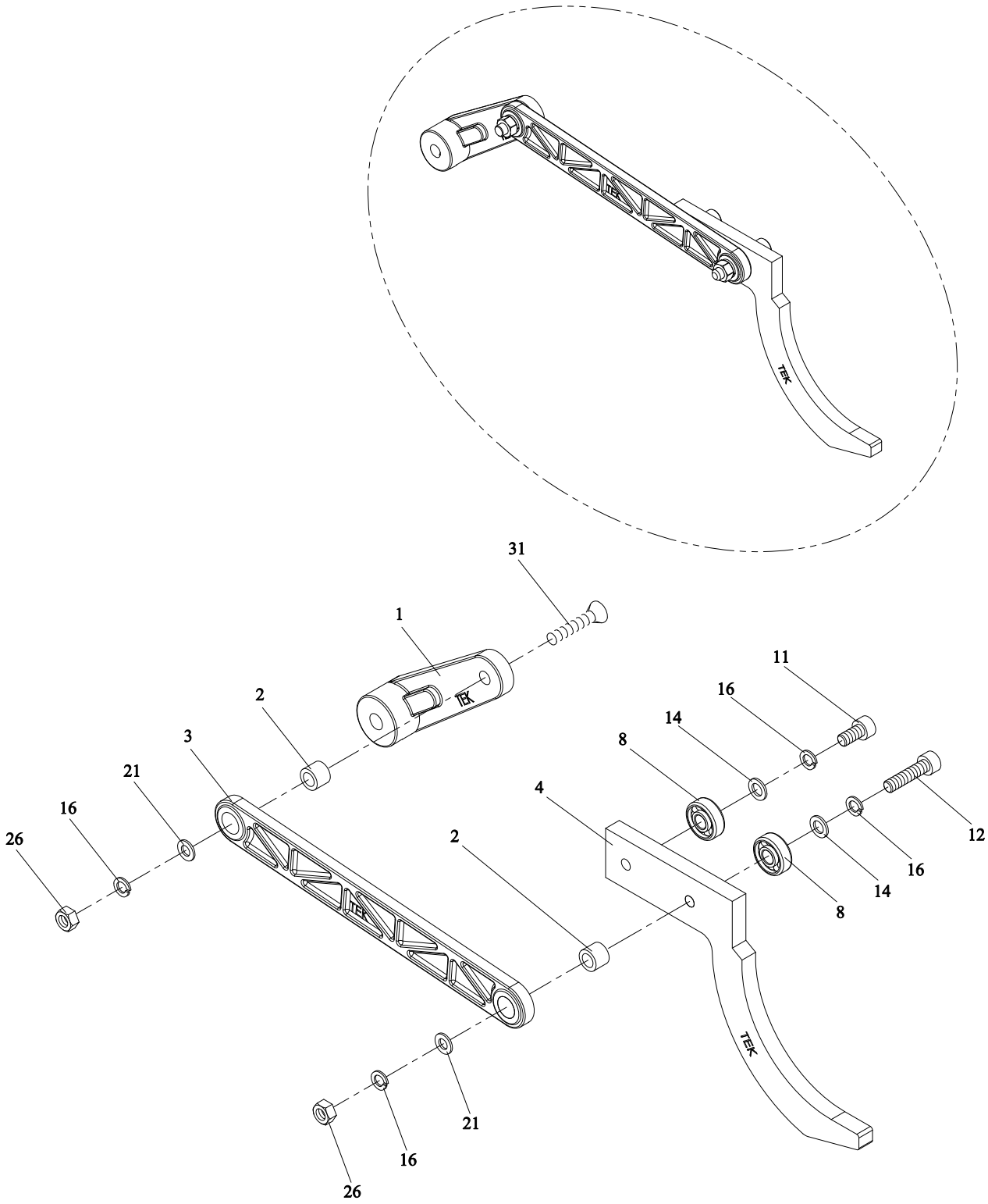

3-2-2 MOVABLE STRAP GUIDE ASS'Y M7-3-220000 M7-3-220010

REF. NO.	PART NO.	DESCRIPTION	Q'TY	REMARKS
	M7-3-220000	Movable Strap Guide Ass'y (For 5-6mm)	1	
	M7-3-220010	Movable Strap Guide Ass'y (For 9mm)	1	
1	M7-3-221101	Rotary Arm	1	
2	M7-3-221200	Spacer	2	
3	M7-3-221300	Link	1	
4	M7-3-221400	Movable Strap Guide (For 5-6mm)	1	
	M7-3-221410	Movable Strap Guide (For 9mm)	1	
8	BR605ZZ	Bearing, 605ZZ	2	
11	HBS0510N	HBS, M5×10 (N)	1	
12	HBS0525N	HBS, M5×25 (N)	1	
14	H44-10950	Washer	2	
16	SW05	SW, M5	4	
21	PW05	PW, M5	2	
26	HN05	HN, M5	2	
31	FMS0520	FMS, M5×20	1	

3-2-3 M4 MOTOR ASS'Y M7-3-230000 M7-3-230010

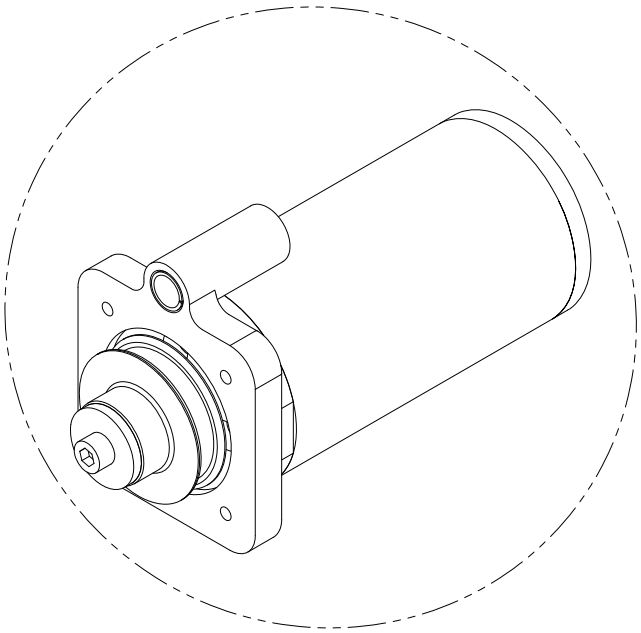

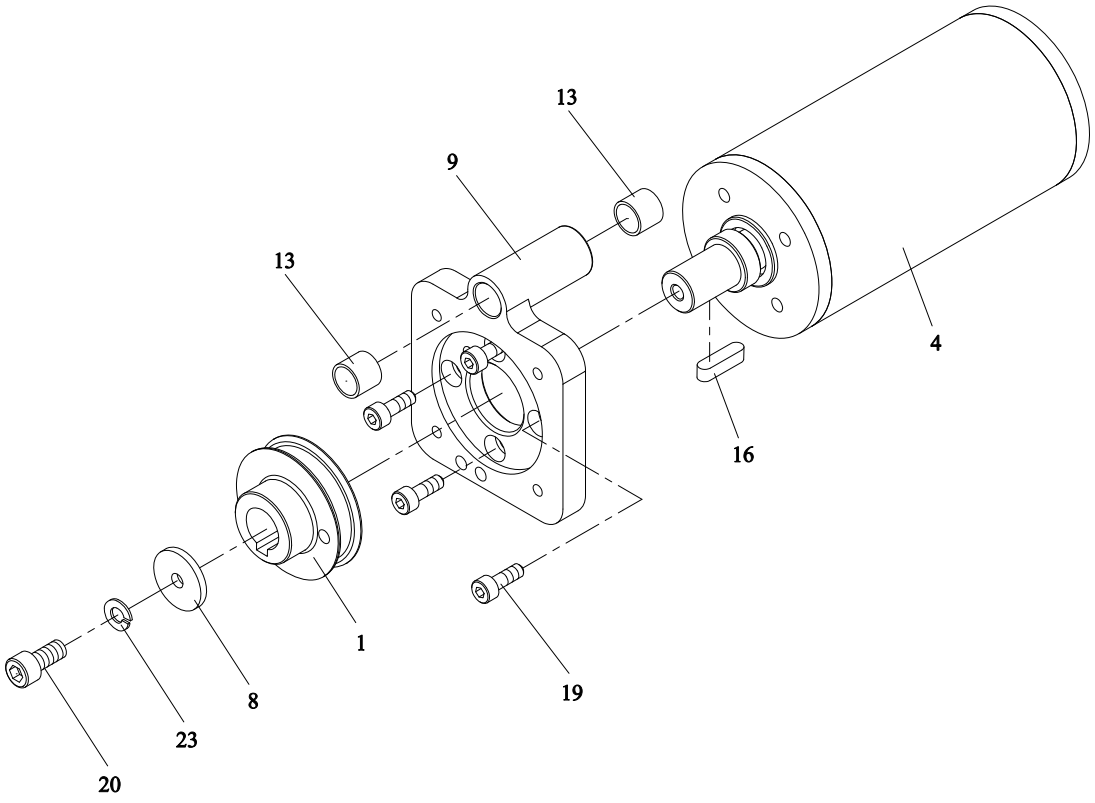

3-2-3 M4 MOTOR ASS'Y M7-3-230000 M7-3-230010

REF. NO.	PART NO.	DESCRIPTION	Q'TY	REMARKS
	M7-3-230000	M4 Motor Ass'y (For 5-6mm)	1	
	M7-3-230010	M4 Motor Ass'y (For 9mm)	1	
1	M7-3-231100	Accumulator Main Roller (For 5-6mm)	1	
	M7-3-231110	Accumulator Main Roller (For 9mm)	1	
4	M7-3-230100	M4 Motor Set	1	
8	TB-223	Washer	1	
9	T7-3-20110	Motor Support	1	
13	MB1010	Metal Bushing, 1010	2	
16	KYA050515	Key, 5×5×15	1	
19	HBS0512N	HBS, M5×12 (N)	4	
20	HBS0612N	HBS, M6×12 (N)	1	
23	SW06	SW, M6	1	

3-2-4 ASSISTANT ROLLER SHAFT ASS'Y T7-3-20080 T7-3-20081

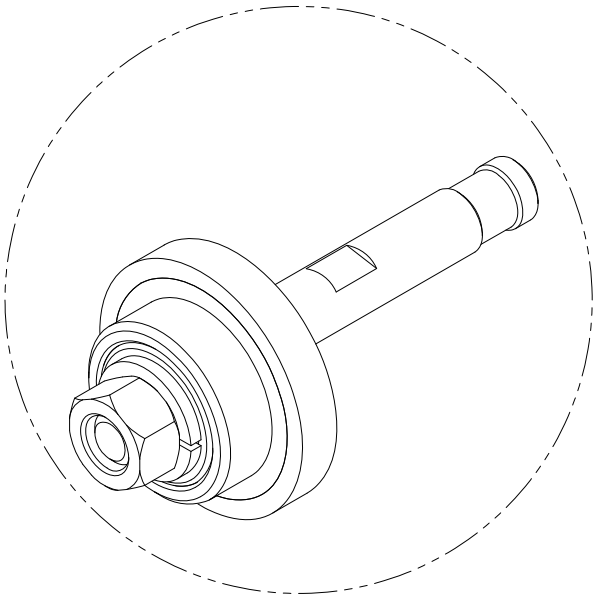

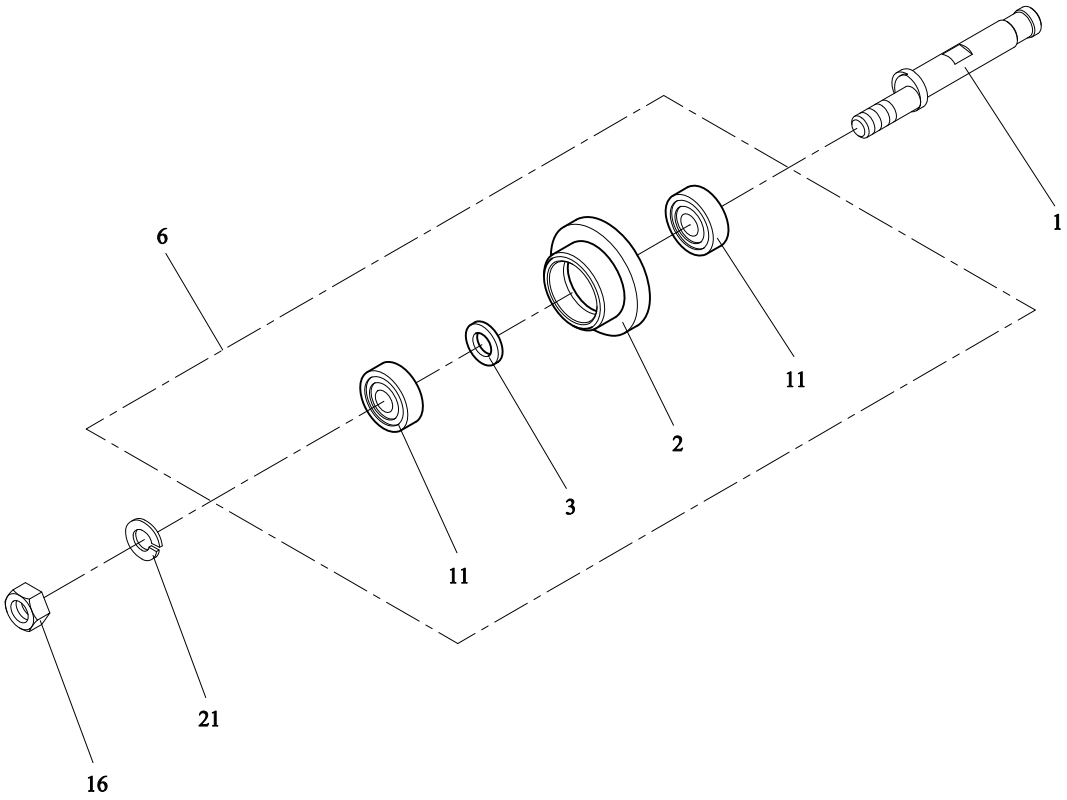

3-2-4 ASSISTANT ROLLER SHAFT ASS'Y T7-3-20080 T7-3-20081

REF. NO.	PART NO.	DESCRIPTION	Q'TY	REMARKS
	T7-3-20080	Assistant Roller Shaft Ass'y (For 5-6mm)	1	
	T7-3-20081	Assistant Roller Shaft Ass'y (For 9mm)	1	
1	T7-3-20150	Shaft	1	
2	T7-3-20160	Assistant Roller (For 5-6mm)	1	
	T7-3-20162	Assistant Roller (For 9mm)	1	
3	T7-3-20200	Spacer	1	
6	T7-3-20100	Assistant Roller Ass'y (For 5-6mm)	1	
	T7-3-20101	Assistant Roller Ass'y (For 9mm)	1	
11	BR608ZZ	Bearing, 608ZZ	2	
16	HN08	HN, M8	1	
21	SW08	SW, M8	1	

3-3 ACCUMULATOR BOX GROUP M7-3-300002

a. (For 550W~1050W) M7-3-300012

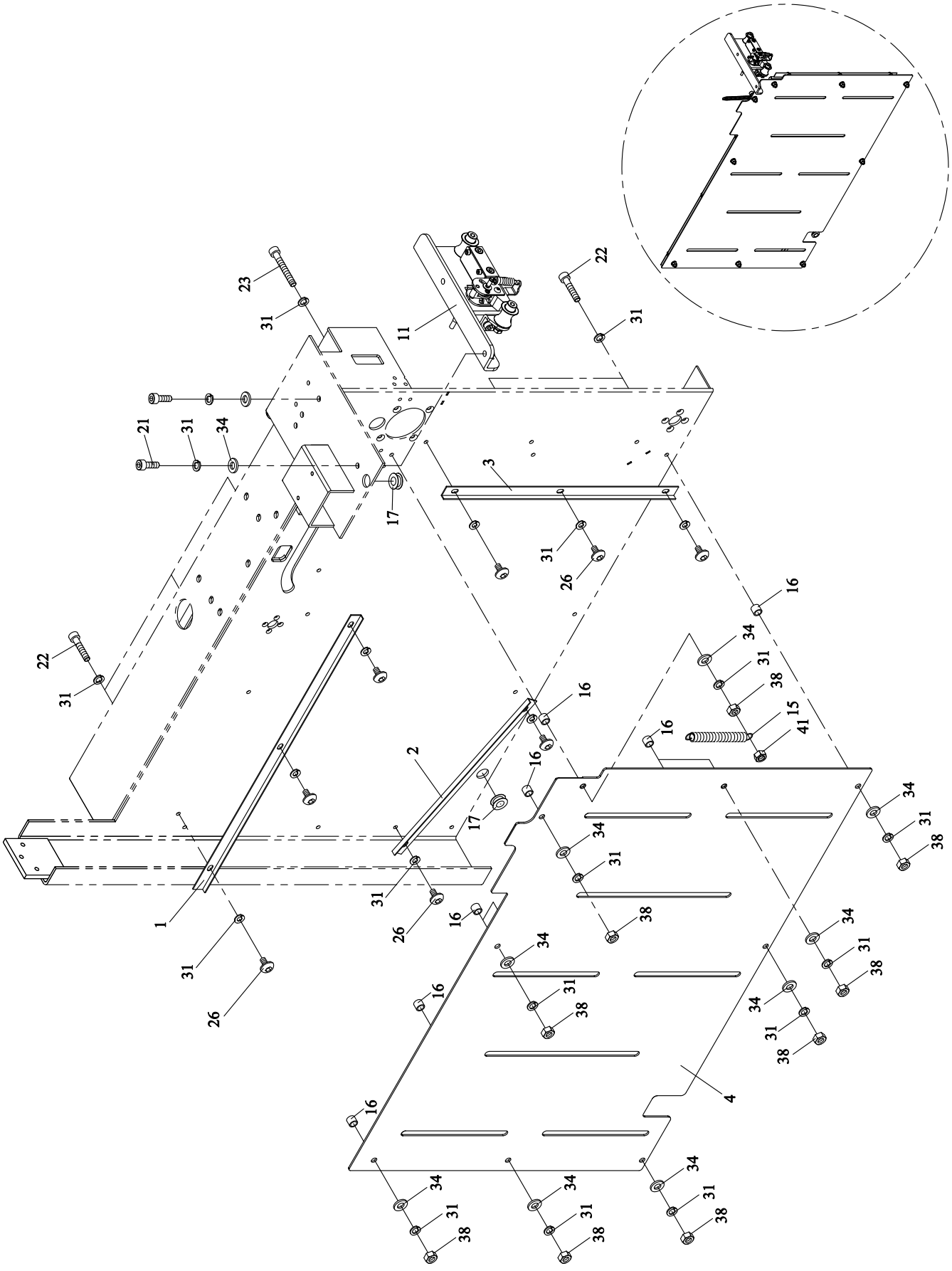

3-3 a. ACCUMULATOR BOX GROUP (For 550W~1050W) M7-3-300002 M7-3-300012

REF. NO.	PART NO.	DESCRIPTION	Q'TY	REMARKS
	M7-3-300002	Accumulator Box Group (For 5-6mm, 550W)	1	
	M7-3-300002S	Accumulator Box Group (Stainless Steel Model)(For 5-6mm, 550W)	1	
	M7-3-300012	Accumulator Box Group (For 9mm, 550W)	1	
	M7-3-300012S	Accumulator Box Group (Stainless Steel Model)(For 9mm, 550W)	1	
	M7-3-300032	Accumulator Box Group (For 5-6mm, 650W~1050W)	1	
	M7-3-300032S	Accumulator Box Group (Stainless Steel Model)(For 5-6mm, 650W~1050W)	1	
	M7-3-300042	Accumulator Box Group (For 9mm, 650W~1050W)	1	
	M7-3-300042S	Accumulator Box Group (Stainless Steel Model)(For 9mm, 650W~1050W)	1	
1	M7-3-301100	Enclosed Plate (For 5-6mm, 550W)	1	
	M7-3-301110	Enclosed Plate (For 9mm, 550W)	1	
	M7-3-301120	Enclosed Plate (For 5-6mm, 650W~1050W)	1	
	M7-3-301130	Enclosed Plate (For 9mm, 650W~1050W)	1	
2	M7-3-301200	Enclosed Plate (For 5-6mm, 550W)	1	
	M7-3-301210	Enclosed Plate (For 9mm, 550W)	1	
	M7-3-301220	Enclosed Plate (For 5-6mm, 650W~1050W)	1	
	M7-3-301230	Enclosed Plate (For 9mm, 650W~1050W)	1	
3	M7-3-301300	Enclosed Plate (For 5-6mm)	1	
	M7-3-301310	Enclosed Plate (For 9mm)	1	
4	M7-3-301400	Accumulator Box Cover (For 550W)	1	
	M7-3-301400S	Accumulator Box Cover (Stainless Steel Model)(For 550W)	1	
	M7-3-301410	Accumulator Box Cover (For 650W~1050W)	1	
	M7-3-301410S	Accumulator Box Cover (Stainless Steel Model)(For 650W~1050W)	1	
11	M7-3-310002	Auto Strap Ejecting Ass'y (For 5-6mm)	1	SEE PAGE C91
	M7-3-310011	Auto Strap Ejecting Ass'y (For 9mm)	1	
15	TC-025	Spring	1	
16	T7-3-10260	Collar (For 5-6mm, 550W)	9	
		Collar (For 5-6mm, 650W~1050W)	11	
	T7-3-10262	Collar (For 9mm, 550W)	9	
		Collar (For 9mm, 650W~1050W)	11	
17	T5-4-10580	Grommet	2	
		Grommet (Option)	3	
21	HBS0612N	HBS, M6×12 (N)	2	

3-3 a. ACCUMULATOR BOX GROUP (For 550W~1050W) M7-3-300002 M7-3-300012

REF. NO.	PART NO.	DESCRIPTION	Q'TY	REMARKS
22	HBS0625N	HBS, M6×25 (N)(For 5-6mm, 550W)	8	
		HBS, M6×25 (N)(For 5-6mm, 650W~1050W)	10	
	HBS0630N	HBS, M6×30 (N)(For 9mm, 550W)	8	
		HBS, M6×30 (N)(For 9mm, 650W~1050W)	10	
23	HBS0640N	HBS, M6×40 (N)	1	
26	THS0608N	THS, M6×8 (N)	8	
31	SW06	SW, M6 (For 550W)	20	
		SW, M6 (For 650W~1050W)	24	
34	PW06A	PW, M6 (A)(For 550W)	12	
		PW, M6 (A)(For 650W~1050W)	14	
38	HN06	HN, M6 (For 550W)	9	
		HN, M6 (For 650W~1050W)	11	
41	NTE06	NTE, M6	1	

3-3 ACCUMULATOR BOX GROUP M7-3-300053
b. (For 1250W/1650W) M7-3-300063

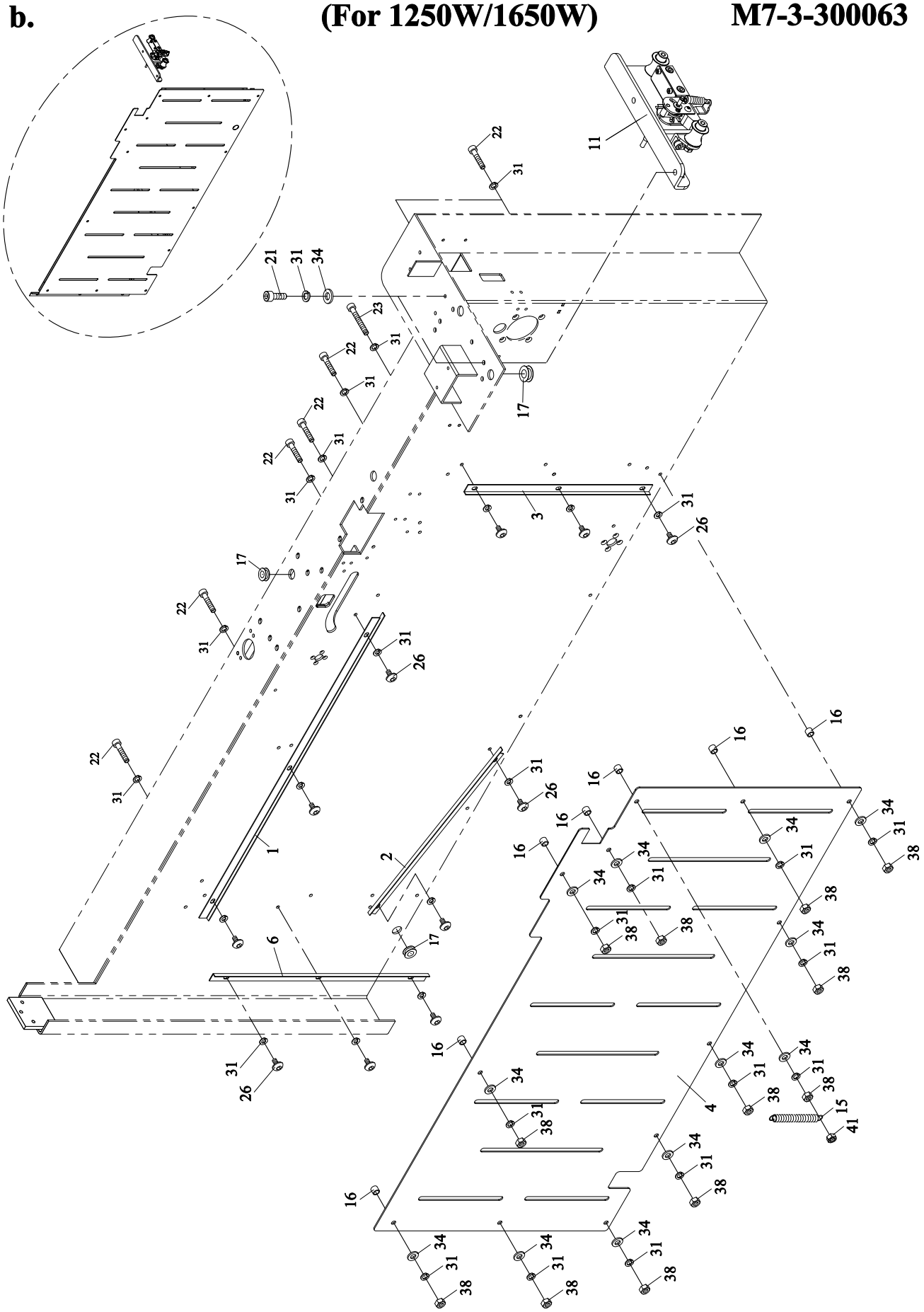

3-3 b. ACCUMULATOR BOX GROUP (For 1250W/1650W) M7-3-300053 M7-3-300063

REF. NO.	PART NO.	DESCRIPTION	Q'TY	REMARKS
	M7-3-300053	Accumulator Box Group (For 5-6mm, 1250W/1650W)	1	
	M7-3-300053S	Accumulator Box Group (Stainless Steel Model)(For 5-6mm, 1250W/1650W)	1	
	M7-3-300063	Accumulator Box Group (For 9mm, 1250W/1650W)	1	
	M7-3-300063S	Accumulator Box Group (Stainless Steel Model)(For 9mm, 1250W/1650W)	1	
1	M7-3-301161	Enclosed Plate (For 5-6mm)	1	
	M7-3-301171	Enclosed Plate (For 9mm)	1	
2	M7-3-301261	Enclosed Plate (For 5-6mm)	1	
	M7-3-301271	Enclosed Plate (For 9mm)	1	
3	M7-3-301340	Enclosed Plate (For 5-6mm)	1	
	M7-3-301350	Enclosed Plate (For 9mm)	1	
4	M7-3-301442	Accumulator Box Cover	1	
	M7-3-301442S	Accumulator Box Cover (Stainless Steel Model)	1	
6	M7-3-301600	Enclosed Plate (For 5-6mm)	1	
	M7-3-301610	Enclosed Plate (For 9mm)	1	
11	M7-3-310002	Auto Strap Ejecting Ass'y (For 5-6mm)	1	SEE PAGE C91
	M7-3-310011	Auto Strap Ejecting Ass'y (For 9mm)	1	
15	TC-025	Spring	1	
16	T7-3-10260	Collar (For 5-6mm)	12	
	T7-3-10262	Collar (For 9mm)	12	
17	T5-4-10580	Grommet	2	
		Grommet (Option)	3	
21	HBS0616N	HBS, M6×16 (N)	2	
22	HBS0625N	HBS, M6×25 (N)(For 5-6mm)	11	
	HBS0630N	HBS, M6×30 (N)(For 9mm)	11	
23	HBS0640N	HBS, M6×40 (N)	1	
26	THS0608N	THS, M6×8 (N)	11	
31	SW06	SW, M6	35	
34	PW06A	PW, M6 (A)	14	
38	HN06	HN, M6	12	
41	NTE06	NTE, M6	1	

3-3-1 AUTO STRAP EJECTING ASS'Y M7-3-310002 M7-3-310011

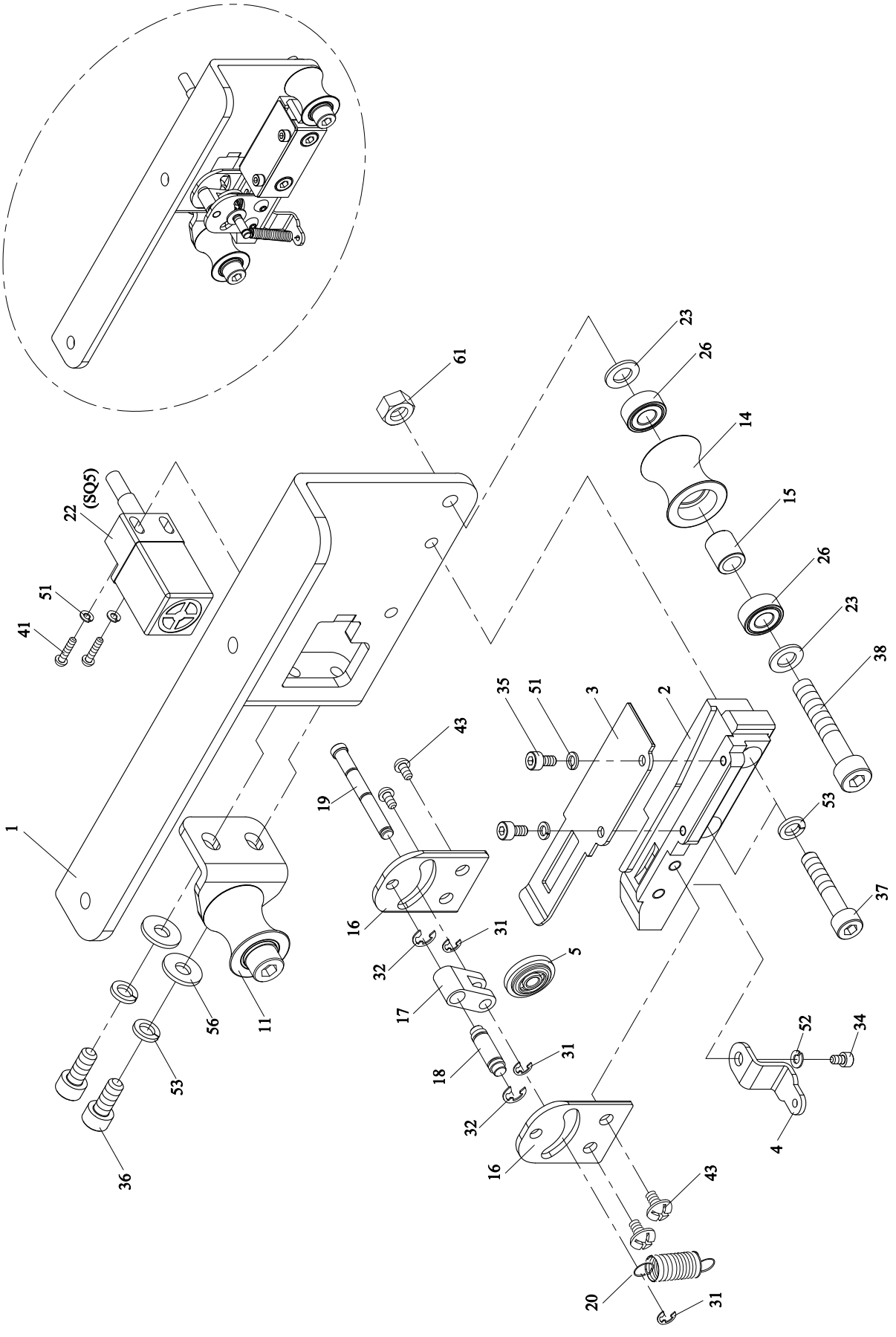

3-3-1 AUTO STRAP EJECTING ASS'Y M7-3-310002 M7-3-310011

REF. NO.	PART NO.	DESCRIPTION	Q'TY	REMARKS
	M7-3-310002	Auto Strap Ejecting Ass'y (For 5-6mm)	1	
	M7-3-310011	Auto Strap Ejecting Ass'y (For 9mm)	1	
1	M7-3-312700	Sensor Bracket	1	
2	M7-3-312800	Inlet Guide (For 5-6mm)	1	
	M7-3-312810	Inlet Guide (For 9mm)	1	
3	M7-3-312900	Cover	1	
4	M7-3-313000	Spring Hook	1	
5	M7-3-313100	Roller	1	
11	M7-3-210001	Roller Ass'y	1	SEE PAGE C77
14	M7-3-211200	Roller	1	
15	M7-3-211300	Collar	1	
16	M7-3-241300	Sensor Lever Support	2	
17	M7-3-241401	Sensor Lever	1	
18	M7-3-241500	Shaft	1	
19	M7-3-241600	Shaft	1	
20	M7-3-313200	Spring	1	
22	MV-6-20220	Proximity Sensor (X18)(SQ5)	1	SEE PAGE C153
23	H44-10950	Washer	2	
26	BR686ZZ	Bearing, 686ZZ	2	
31	ER03	Snap Ring, E-3	3	
32	ER04	Snap Ring, E-4	2	
34	HBS0408N	HBS, M4×8 (N)	1	
35	HBS0306N	HBS, M3×6 (N)	2	
36	HBS0512N	HBS, M5×12 (N)	2	
37	HBS0520N	HBS, M5×20 (N)	2	
38	HBS0635N	HBS, M6×35 (N)	1	
41	PMS0316	PMS, M3×16	2	
43	TMS0408N	TMS, M4×8 (N)	4	
51	SW03	SW, M3	2	
53	SW05	SW, M5	2	
56	PW05	PW, M5	2	
61	HN06	HN, M6	1	

4 REEL CONTROL GROUP M7-4-100001
M7-4-100011

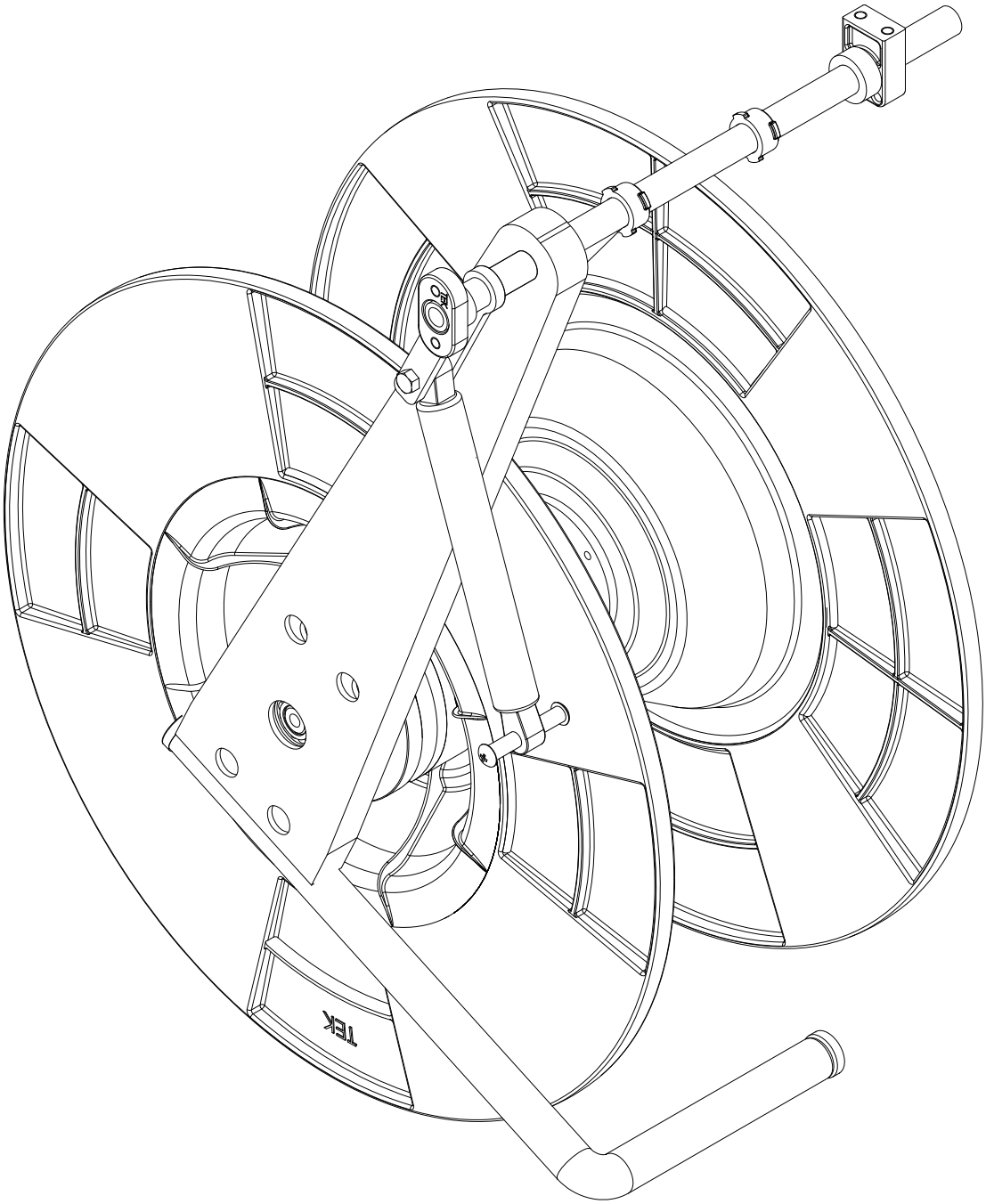

4 REEL CONTROL GROUP M7-4-100001 M7-4-100011

REF. NO.	PART NO.	DESCRIPTION	Q'TY	REMARKS
	M7-4-100001	Reel Control Group (For 200mm)	1	SEE PAGE C95
	M7-4-100011	Reel Control Group (For 150mm)(Option)	1	

4-1 REEL CONTROL GROUP M7-4-100001 M7-4-100011

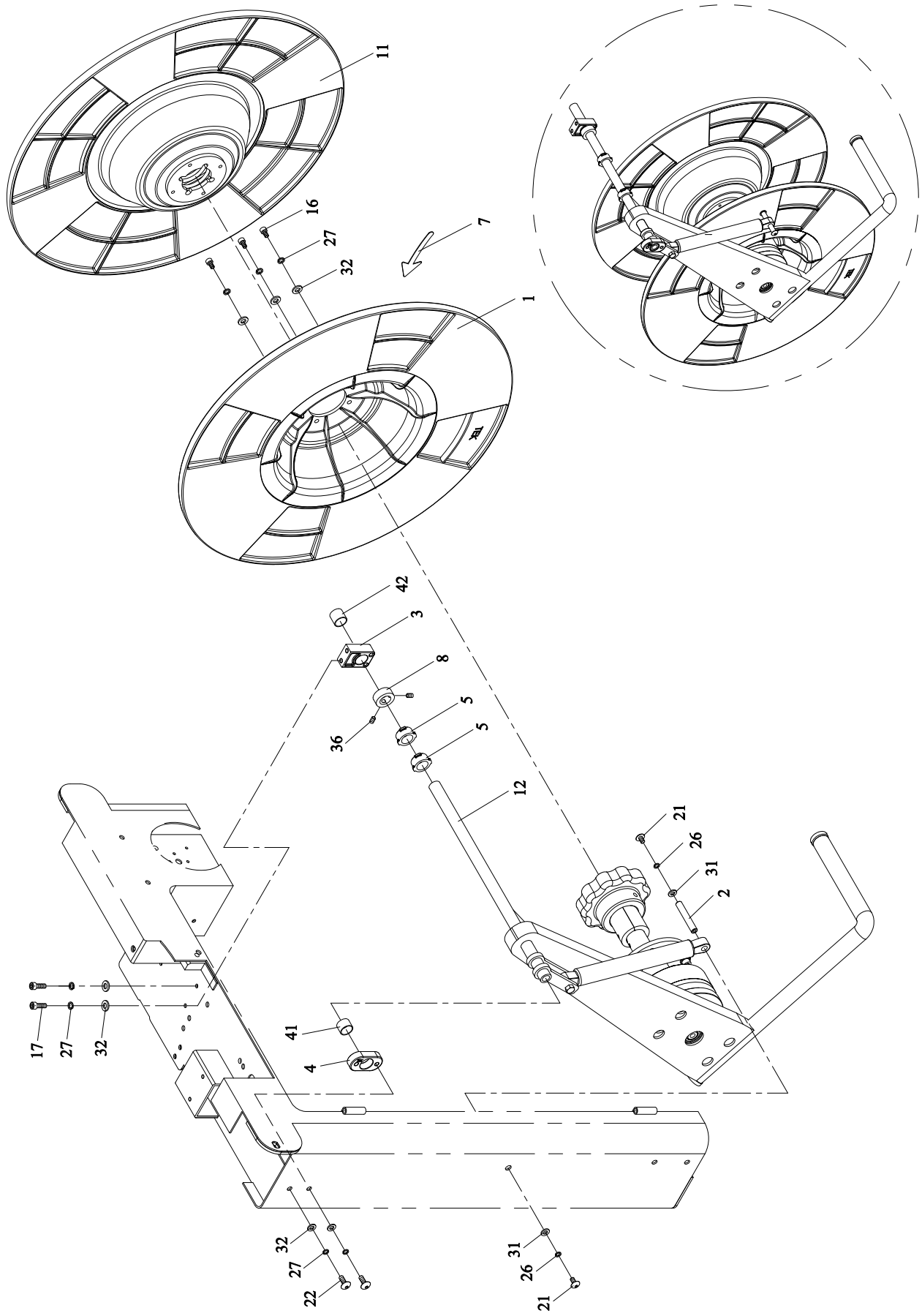

4-1 REEL CONTROL GROUP M7-4-100001 M7-4-100011

REF. NO.	PART NO.	DESCRIPTION	Q'TY	REMARKS
	M7-4-100001	Reel Control Group (For 200mm)	1	
	M7-4-100011	Reel Control Group (For 150mm)(Option)	1	
1	M7-4-101101	Inner Flange (For 200mm)	1	
	T7-4-10112	Inner Flange (For 150mm)(Option)	1	
2	M7-4-101200	Shaft	1	
3	M7-4-101301	Base (L)	1	
4	M7-4-101401	Base (R)	1	
5	M7-4-101500	Collar	2	
7	LA-30240	Label	1	
8	M7-1-101600	Collar	1	
11	M7-4-110001	Outer Flange Ass'y (For 200mm)	1	SEE PAGE C97
	M7-4-110010	Outer Flange Ass'y (For 150mm)(Option)	1	
12	M7-4-120001	Reel Crank Ass'y (For 200mm)	1	SEE PAGE C99
	M7-4-120011	Reel Crank Ass'y (For 150mm)(Option)	1	
16	HBS0610N	HBS, M6×10 (N)	4	
17	HBS0616N	HBS, M6×16 (N)	2	
21	THS0508N	THS, M5×8 (N)	2	
22	THS0612N	THS, M6×12 (N)	2	
26	SW05	SW, M5	2	
27	SW06	SW, M6	8	
31	PW05	PW, M5	2	
32	PW06A	PW, M6 (A)	8	
36	HSS0505GN	HSS, M5×5 (G)(N)	2	
41	MB1510	Metal Bushing, 1510	1	
42	MB1515	Metal Bushing, 1515	1	

4-1-1 OUTER FLANGE ASS'Y M7-4-110001 M7-4-110010

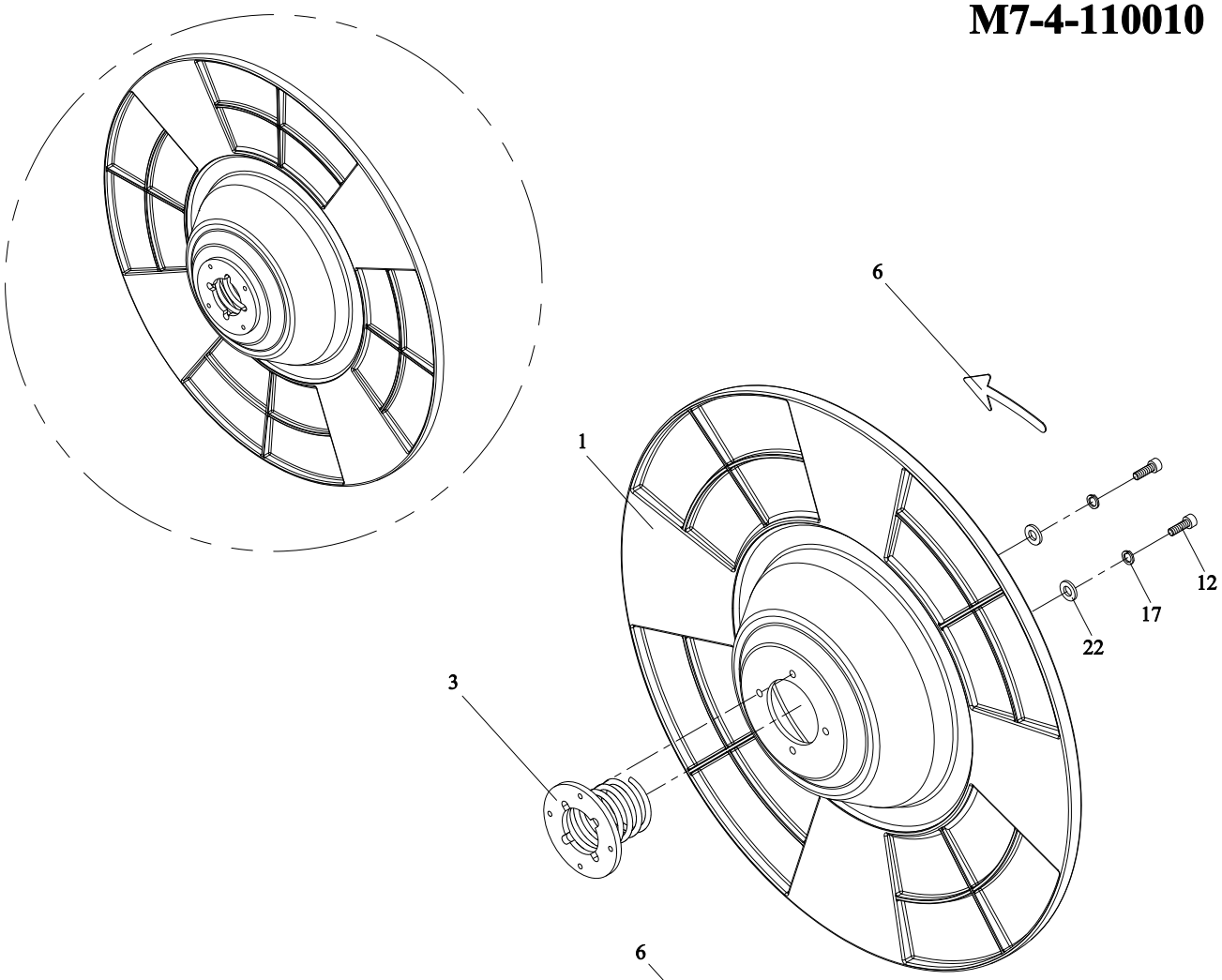

For 200mm

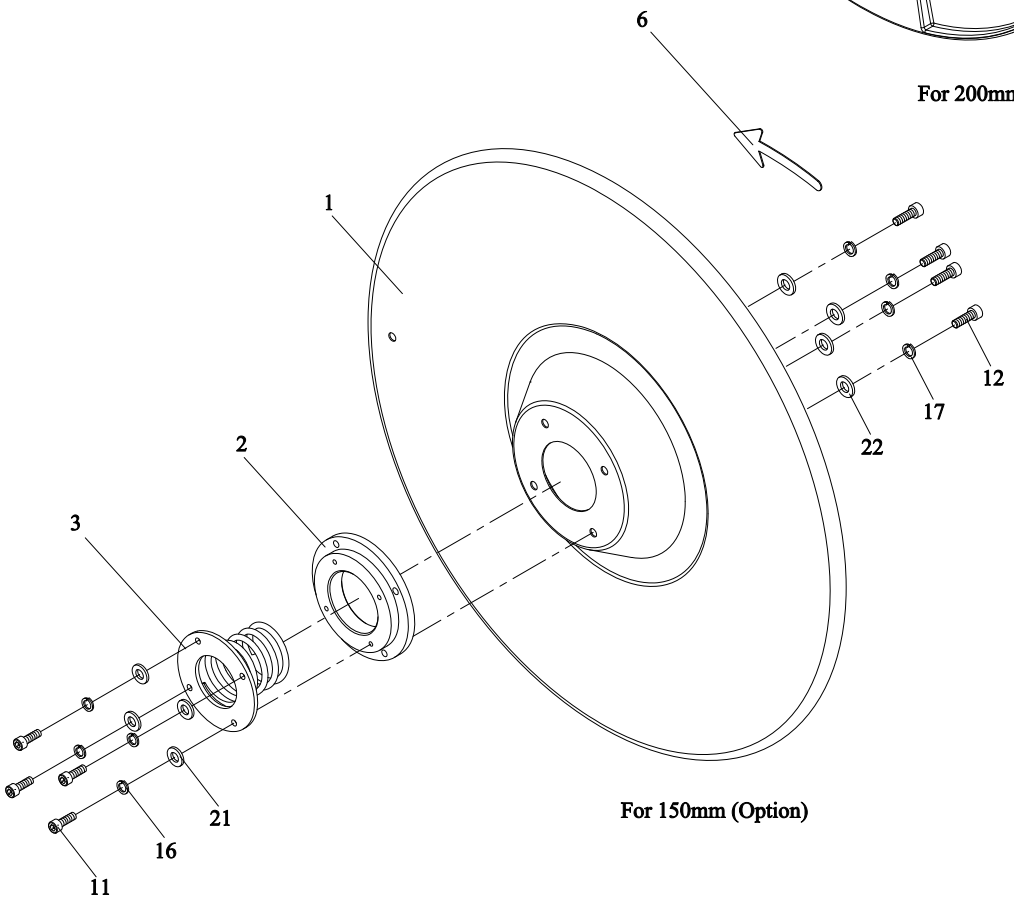

For 150mm (Option)

4-1-1 OUTER FLANGE ASS'Y M7-4-110001 M7-4-110010

REF. NO.	PART NO.	DESCRIPTION	Q'TY	REMARKS
	M7-4-110001	Outer Flange Ass'y (For 200mm)	1	
	M7-4-110010	Outer Flange Ass'y (For 150mm)(Option)	1	
1	M7-4-111101	Outer Flange (For 200mm)	1	
	T7-4-10122	Outer Flange (For 150mm)(Option)	1	
2	M7-4-111200	Plate (For 150mm)(Option)	1	
3	M7-4-111310	Spring (For 200mm)	1	
	M7-4-111300	Spring (For 150mm)(Option)	1	
6	LA-30240	Label	1	
11	HBS0416N	HBS, M4×16 (N)(For 150mm)(Option)	4	
12	HBS0512N	HBS, M5×12 (N)(For 200mm)	4	
	HBS0610N	HBS, M6×10 (N)(For 150mm)(Option)	4	
16	SW04	SW, M4 (For 150mm)(Option)	4	
17	SW05	SW, M5 (For 200mm)	4	
	SW06	SW, M6 (For 150mm)(Option)	4	
21	PW04	PW, M4 (For 150mm)(Option)	4	
22	T7-2-20380	Washer (φ5× φ 14)(For 200mm)	4	
	PW06A	PW, M6 (A)(For 150mm)(Option)	4	

4-1-2 REEL CRANK ASS'Y M7-4-120001 M7-4-120011

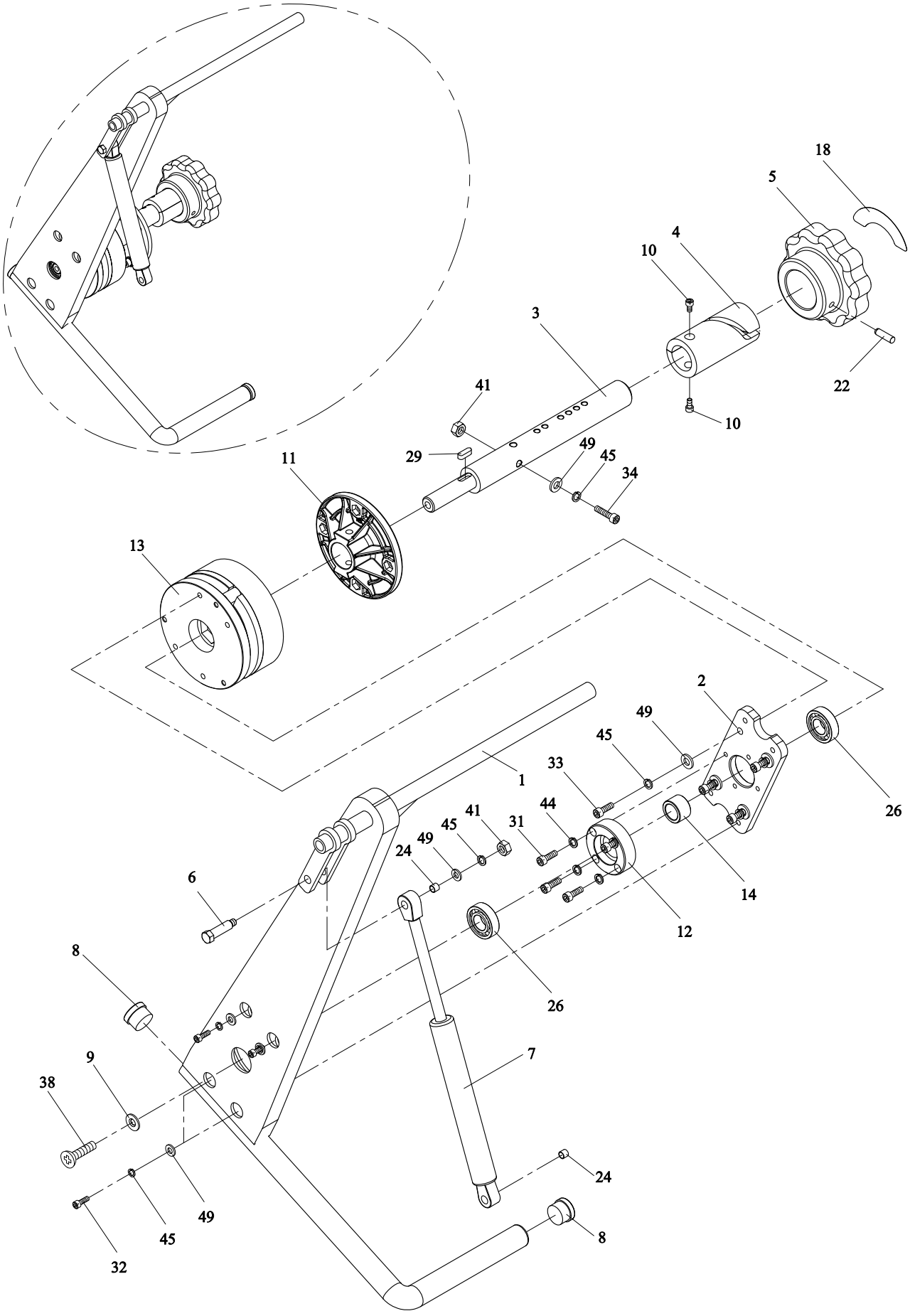

4-1-2 REEL CRANK ASS'Y M7-4-120001 M7-4-120011

REF. NO.	PART NO.	DESCRIPTION	Q'TY	REMARKS
	M7-4-120001	Reel Crank Ass'y (For 200mm)	1	
	M7-4-120011	Reel Crank Ass'y (For 150mm)(Option)	1	
1	M7-4-121100	Reel Crank	1	
2	M7-4-121200	Support	1	
3	M7-4-121301	Shaft (For 200mm)	1	
	M7-4-121311	Shaft (For 150mm)(Option)	1	
4	M7-4-121401	Shaft	1	
5	M7-4-121500	Reel Nut Handle	1	
6	M7-4-121600	Bolt	1	
7	M7-4-121701	Gas Spring	1	
8	M7-4-121800	Lid	2	
9	M7-4-121900	Washer	1	
10	M7-4-122000	Screw, M6×8	2	
11	M7-4-122100	Plate (For 200mm)	1	
	T7-4-10140	Plate (For 150mm)(Option)	1	
12	T7-4-20160	Bearing Support	1	
13	T7-4-20170	Brake For Reel	1	
14	T7-4-20320	Spacer	1	
18	LA-30230	Label	1	
22	MSA0620	Lock Pin, φ 6×20	1	
24	MB0812	Metal Bushing, 0812	2	
26	BR6002ZZ	Bearing, 6002ZZ	2	
29	KYA050515	Key, 5×5×15	1	
31	HBS0516N	HBS, M5×16 (N)	4	
32	HBS0616N	HBS, M6×16 (N)	4	
33	HBS0620N	HBS, M6×20 (N)	4	
34	HBS0645N	HBS, M6×45 (N)	1	
38	FMS0820N	FMS, M8×20 (N)	1	
41	HN06	HN, M6	2	
44	SW05	SW, M5	4	
45	SW06	SW, M6	10	
49	PW06A	PW, M6 (A)	10	

5 BODY FRAME UNIT M7-5-900002 M7-5-900012

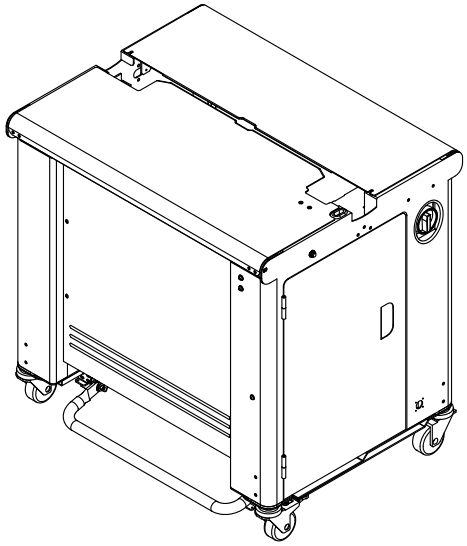

1

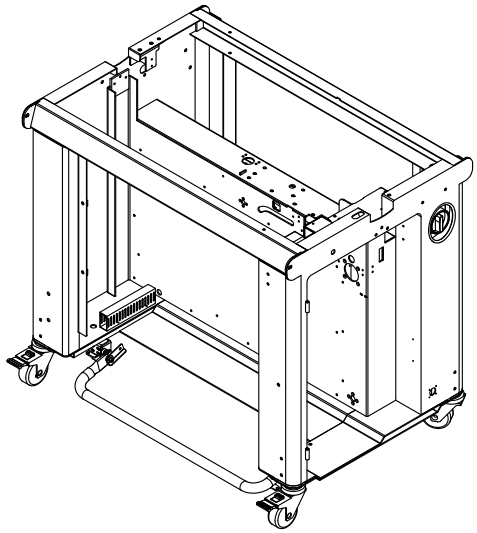

3

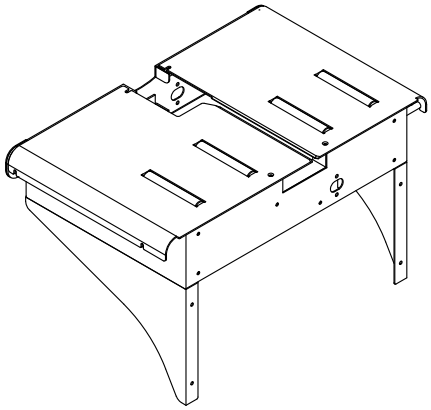

(For 850W/1050W/1650W)

2

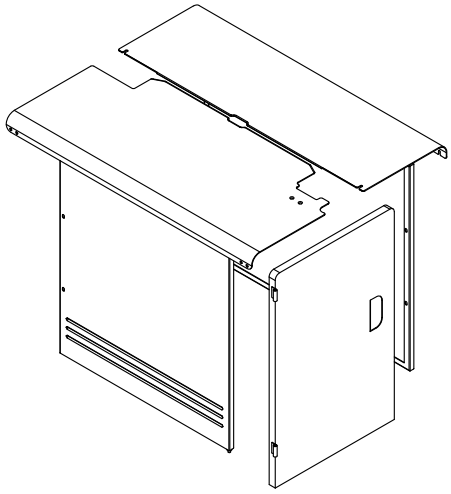

4

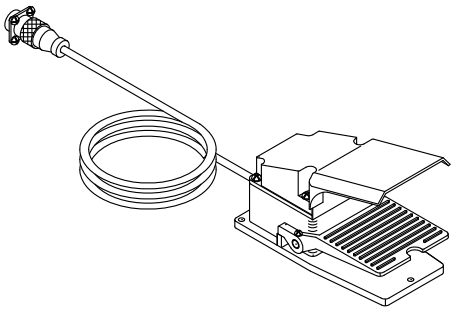

(Option)

5 BODY FRAME UNIT M7-5-900002 M7-5-900012

REF. NO.	PART NO.	DESCRIPTION	Q'TY	REMARKS
	M7-5-900002	Body Frame Unit (For 5-6mm, 550W)	1	
	M7-5-900002S	Body Frame Unit (Stainless Steel Model) (For 5-6mm, 550W)	1	
	M7-5-900012	Body Frame Unit (For 9mm, 550W)	1	
	M7-5-900012S	Body Frame Unit (Stainless Steel Model) (For 9mm, 550W)	1	
	M7-5-900022	Body Frame Unit (For 5-6mm, 650W)	1	
	M7-5-900022S	Body Frame Unit (Stainless Steel Model) (For 5-6mm, 650W)	1	
	M7-5-900032	Body Frame Unit (For 9mm, 650W)	1	
	M7-5-900032S	Body Frame Unit (Stainless Steel Model) (For 9mm, 650W)	1	
	M7-5-900042	Body Frame Unit (For 5-6mm, 850W)	1	
	M7-5-900042S	Body Frame Unit (Stainless Steel Model) (For 5-6mm, 850W)	1	
	M7-5-900052	Body Frame Unit (For 9mm, 850W)	1	
	M7-5-900052S	Body Frame Unit (Stainless Steel Model) (For 9mm, 850W)	1	
	M7-5-900062	Body Frame Unit (For 5-6mm, 1050W)	1	
	M7-5-900062S	Body Frame Unit (Stainless Steel Model) (For 5-6mm, 1050W)	1	
	M7-5-900072	Body Frame Unit (For 9mm, 1050W)	1	
	M7-5-900072S	Body Frame Unit (Stainless Steel Model) (For 9mm, 1050W)	1	
	M7-5-900082	Body Frame Unit (For 5-6mm, 1250W)	1	
	M7-5-900082S	Body Frame Unit (Stainless Steel Model) (For 5-6mm, 1250W)	1	
	M7-5-900092	Body Frame Unit (For 9mm, 1250W)	1	
	M7-5-900092S	Body Frame Unit (Stainless Steel Model) (For 9mm, 1250W)	1	
	M7-5-900212	Body Frame Unit (For 5-6mm, 1650W)	1	
	M7-5-900212S	Body Frame Unit (Stainless Steel Model) (For 5-6mm, 1650W)	1	
	M7-5-900222	Body Frame Unit (For 9mm, 1650W)	1	
	M7-5-900222S	Body Frame Unit (Stainless Steel Model) (For 9mm, 1650W)	1	
1	M7-5-100002	Body Frame With Foot Bar Group (For 550W)	1	SEE PAGE C105
	M7-5-100002S	Body Frame With Foot Bar Group (Stainless Steel Model)(For 550W)	1	
	M7-5-100012	Body Frame With Foot Bar Group (For 650W~1050W)	1	
	M7-5-100012S	Body Frame With Foot Bar Group (Stainless Steel Model)(For 650W~1050W)	1	

5 BODY FRAME UNIT M7-5-900002 M7-5-900012

REF. NO.	PART NO.	DESCRIPTION	Q'TY	REMARKS
	M7-5-100022	Body Frame With Foot Bar Group (For 1250W/1650W)	1	
	M7-5-100022S	Body Frame With Foot Bar Group (Stainless Steel Model)(For 1250W/1650W)	1	
2	M7-5-200002	Cover Group (For 5-6mm, 550W)	1	SEE PAGE C113
	M7-5-200002S	Cover Group (Stainless Steel Model) (For 5-6mm, 550W)	1	
	M7-5-200012	Cover Group (For 9mm, 550W)	1	
	M7-5-200012S	Cover Group (Stainless Steel Model) (For 9mm, 550W)	1	
	M7-5-200022	Cover Group (For 5-6mm, 650W)	1	
	M7-5-200022S	Cover Group (Stainless Steel Model) (For 5-6mm, 650W)	1	
	M7-5-200032	Cover Group (For 9mm, 650W)	1	
	M7-5-200032S	Cover Group (Stainless Steel Model) (For 9mm, 650W)	1	
	M7-5-200042	Cover Group (For 5-6mm, 850W/1050W)	1	
	M7-5-200042S	Cover Group (Stainless Steel Model) (For 5-6mm, 850W/1050W)	1	
	M7-5-200052	Cover Group (For 9mm, 850W/1050W)	1	
	M7-5-200052S	Cover Group (Stainless Steel Model) (For 9mm, 850W/1050W)	1	
	M7-5-200062	Cover Group (For 5-6mm, 1250W)	1	SEE PAGE C117
	M7-5-200062S	Cover Group (Stainless Steel Model) (For 5-6mm, 1250W)	1	
	M7-5-200072	Cover Group (For 9mm, 1250W)	1	
	M7-5-200072S	Cover Group (Stainless Steel Model) (For 9mm, 1250W)	1	
	M7-5-200082	Cover Group (For 5-6mm, 1650W)	1	
	M7-5-200082S	Cover Group (Stainless Steel Model) (For 5-6mm, 1650W)	1	
	M7-5-200092	Cover Group (For 9mm, 1650W)	1	
	M7-5-200092S	Cover Group (Stainless Steel Model) (For 9mm, 1650W)	1	
3	M7-5-300001	Extension Table Group (For 5-6mm, 850W)	1	SEE PAGE C131
	M7-5-300001S	Extension Table Group (Stainless Steel Model) (For 5-6mm, 850W)	1	
	M7-5-300011	Extension Table Group (For 9mm, 850W)	1	
	M7-5-300011S	Extension Table Group (Stainless Steel Model) (For 9mm, 850W)	1	

5 BODY FRAME UNIT M7-5-900002 M7-5-900012

REF. NO.	PART NO.	DESCRIPTION	Q'TY	REMARKS
	M7-5-300021	Extension Table Group (For 5-6mm, 1050W/1650W)	1	
	M7-5-300021S	Extension Table Group (Stainless Steel Model) (For 5-6mm, 1050W/1650W)	1	
	M7-5-300031	Extension Table Group (For 9mm, 1050W/1650W)	1	
	M7-5-300031S	Extension Table Group (Stainless Steel Model) (For 9mm, 1050W/1650W)	1	
4	T7-6-40001	Pedal Control Set (Option)	1	SEE PAGE C139

5-1 BODY FRAME WITH FOOT BAR GROUP

M7-5-100002
M7-5-100012

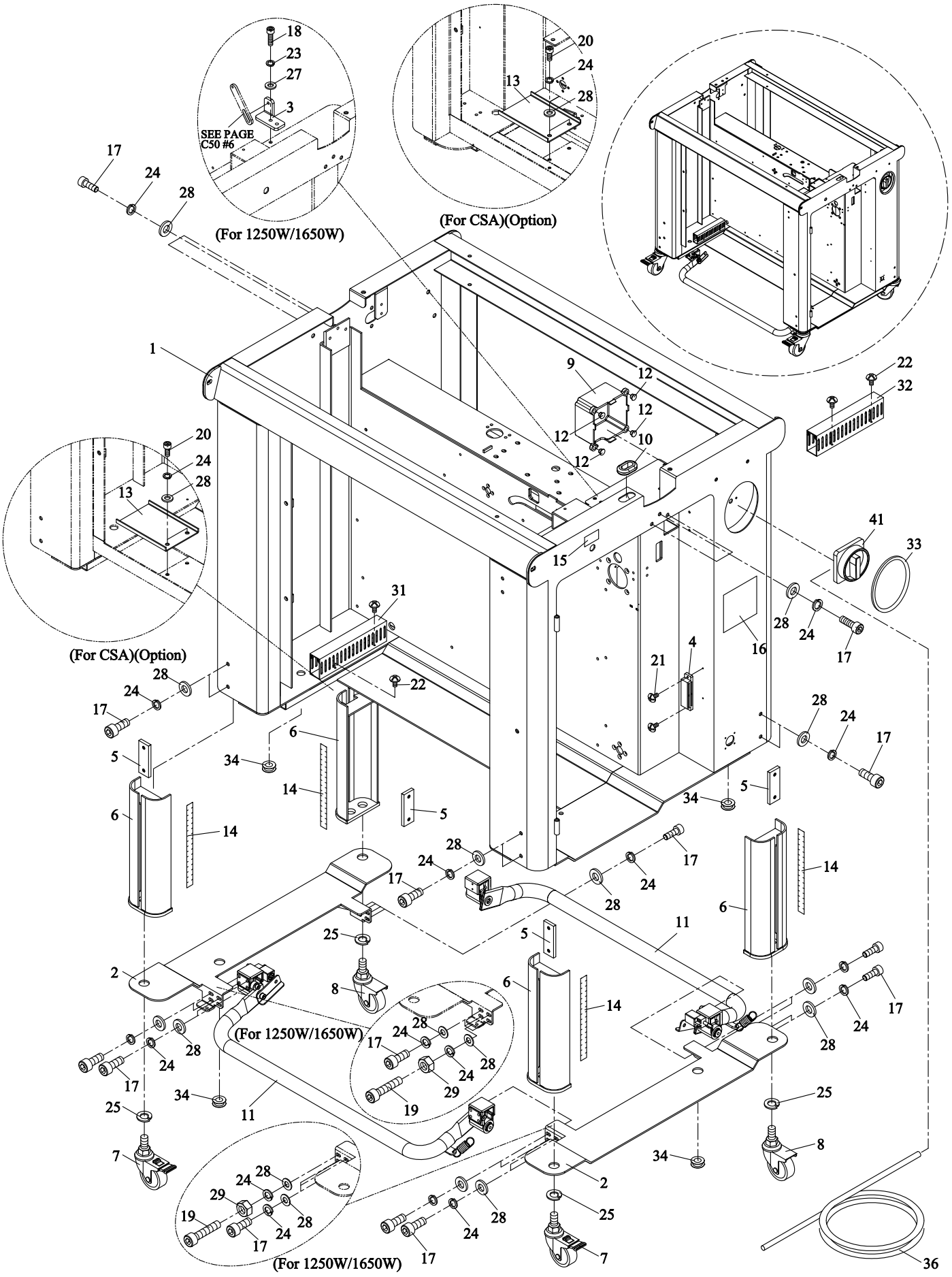

5-1 BODY FRAME WITH FOOT BAR GROUP M7-5-100002 M7-5-100012

REF. NO.	PART NO.	DESCRIPTION	Q'TY	REMARKS
	M7-5-100002	Body Frame With Foot Bar Group (For 550W)	1	
	M7-5-100002S	Body Frame With Foot Bar Group (Stainless Steel Model)(For 550W)	1	
	M7-5-100012	Body Frame With Foot Bar Group (For 650W~1050W)	1	
	M7-5-100012S	Body Frame With Foot Bar Group (Stainless Steel Model)(For 650W~1050W)	1	
	M7-5-100022	Body Frame With Foot Bar Group (For 1250W/1650W)	1	
	M7-5-100022S	Body Frame With Foot Bar Group (Stainless Steel Model)(For 1250W/1650W)	1	
1	M7-5-101103	Body Frame (For 550W)	1	
	M7-5-101103S	Body Frame (Stainless Steel Model)(For 550W)	1	
	M7-5-101132	Body Frame (For CSA, 550W)(Option)	1	
	M7-5-101132S	Body Frame (Stainless Steel Model)(For CSA, 550W)(Option)	1	
	M7-5-101112	Body Frame (For 650W~1050W)	1	
	M7-5-101112S	Body Frame (Stainless Steel Model)(For 650W~1050W)	1	
	M7-5-101142	Body Frame (For CSA, 650W~1050W)(Option)	1	
	M7-5-101142S	Body Frame (Stainless Steel Model)(For CSA, 650W~1050W)(Option)	1	
	M7-5-101123	Body Frame (For 1250W/1650W)	1	
	M7-5-101123S	Body Frame (Stainless Steel Model)(For 1250W/1650W)	1	
	M7-5-101152	Body Frame (For CSA, 1250W/1650W) (Option)	1	
	M7-5-101152S	Body Frame (Stainless Steel Model)(For CSA, 1250W/1650W)(Option)	1	
2	M7-5-101202	Support	2	
	M7-5-101202S	Support (Stainless Steel Model)	2	
3	M7-5-101500	Base (For 1250W/1650W)	1	
4	T6-5-10160	Magnet Catch	1	
5	T7-5-10150	Fix Plate	4	
	T7-5-10150S	Fix Plate (Stainless Steel Model)	4	
6	M7-5-101700	Adjusment Leg	4	
	M7-5-101700S	Adjusment Leg (Stainless Steel Model)	4	
7	T7-5-10170	Caster (Brake)	2	
	T7-5-10170S	Caster (Brake)(Stainless Steel Model)	2	
8	T7-5-10180	Caster (Free)	2	
	T7-5-10180S	Caster (Free)(Stainless Steel Model)	2	
9	M7-5-101901	Cover	1	
10	M7-5-102000	Grommet	1	

5-1 BODY FRAME WITH FOOT BAR GROUP M7-5-100002 M7-5-100012

REF. NO.	PART NO.	DESCRIPTION	Q'TY	REMARKS
11	M7-5-110002	Foot Bar Ass'y (For 550W)	1	SEE PAGE C109
		Foot Bar Ass'y (For 550W)(Option)	2	
	M7-5-110002S	Foot Bar Ass'y (Stainless Steel Model) (For 550W)	1	
		Foot Bar Ass'y (Stainless Steel Model) (For 550W)(Option)	2	
	M7-5-110012	Foot Bar Ass'y (For 1250W/1650W)	1	
		Foot Bar Ass'y (For 1250W/1650W)(Option)	2	
	M7-5-110012S	Foot Bar Ass'y (Stainless Steel Model) (For 1250W/1650W)	1	
		Foot Bar Ass'y (Stainless Steel Model) (For 1250W/1650W)(Option)	2	
	M7-5-110021	Foot Bar Ass'y (For 650W~1050W)	1	
		Foot Bar Ass'y (For 650W~1050W)(Option)	2	
	M7-5-110021S	Foot Bar Ass'y (Stainless Steel Model) (For 650W~1050W)	1	
		Foot Bar Ass'y (Stainless Steel Model) (For 650W~1050W)(Option)	2	
12	T7-5-20210	Rubber Plug	4	
13	M7-5-101301	Plate (For CSA)(Option)	2	
	M7-5-101301S	Plate (Stainless Steel Model)(For CSA)(Option)	2	
14	LA-50094	Label	4	
15	LA-30220	Label (Reel Brake Release)	1	
16	LA-30251	Label	1	
17	HBS0616N	HBS, M6×16 (N)(For 550W~1050W)	22	
		HBS, M6×16 (N)(For 1250W/1650W)	20	
		HBS, M6×16 (N)(For 550W~1050W)(Option)	30	
		HBS, M6×16 (N)(For 1250W/1650W)(Option)	26	
	HBS0616S	HBS, M6×16 (Stainless Steel Model) (For 550W~1050W)	22	
		HBS, M6×16 (Stainless Steel Model) (For 1250W/1650W)	20	
		HBS, M6×16 (Stainless Steel Model) (For 550W~1050W)(Option)	30	
		HBS, M6×16 (Stainless Steel Model) (For 1250W/1650W)(Option)	26	
18	HBS0516N	HBS, M5×16 (N)(For 1250W/1650W)	2	
19	HBS0630N	HBS, M6×30 (N)(For 1250W/1650W)	2	
		HBS, M6×30 (N)(For 1250W/1650W)(Option)	4	
20	HBS0612N	HBS, M6×12 (N)(For CSA)(Option)	4	
	HBS0612S	HBS, M6×12 (Stainless Steel Model)(For CSA)(Option)	4	
21	TMS0308N	TMS, M3×8 (N)	2	

5-1 BODY FRAME WITH FOOT BAR GROUP M7-5-100002 M7-5-100012

REF. NO.	PART NO.	DESCRIPTION	Q'TY	REMARKS
22	TMS0406	TMS, M4×6	2	
		TMS, M4×6 (Option)	4	
23	SW05	SW, M5 (For 1250W/1650W)	2	
24	SW06	SW, M6	22	
		SW, M6 (Option)	34	
	SW06S	SW, M6 (Stainless Steel Model)	22	
		SW, M6 (Stainless Steel Model)(Option)	34	
25	SW16	SW, M16	4	
	SW16S	SW, M16 (Stainless Steel Model)	4	
27	PW05	PW, M5 (For 1250W/1650W)	2	
28	PW06A	PW, M6 (A)	22	
		PW, M6 (A)(Option)	34	
	PW06AS	PW, M6 (A)(Stainless Steel Model)	22	
		PW, M6 (A)(Stainless Steel Model)(Option)	34	
29	HN06	HN, M6 (For 1250W/1650W)	2	
		HN, M6 (For 1250W/1650W)(Option)	4	
31	WD25450170	Wire Duct 25×45×170	1	
32	WD25450110	Wire Duct 25×45×110 (Option)	1	
33	M7-5-101800	Grommet	1	
34	T5-4-10580	Grommet	2	
		Grommet (Option)	4	
36	EW720105B003	Wire Ass'y (For 550W)	1	
	EW720106C003	Wire Ass'y (For 650W~1050W)	1	
	EW720112F003	Wire Ass'y (For 1250W/1650W)	1	
41	TK-001	Main Power Switch	1	

5-1-1 **FOOT BAR ASS'Y** **M7-5-110002**
M7-5-110012

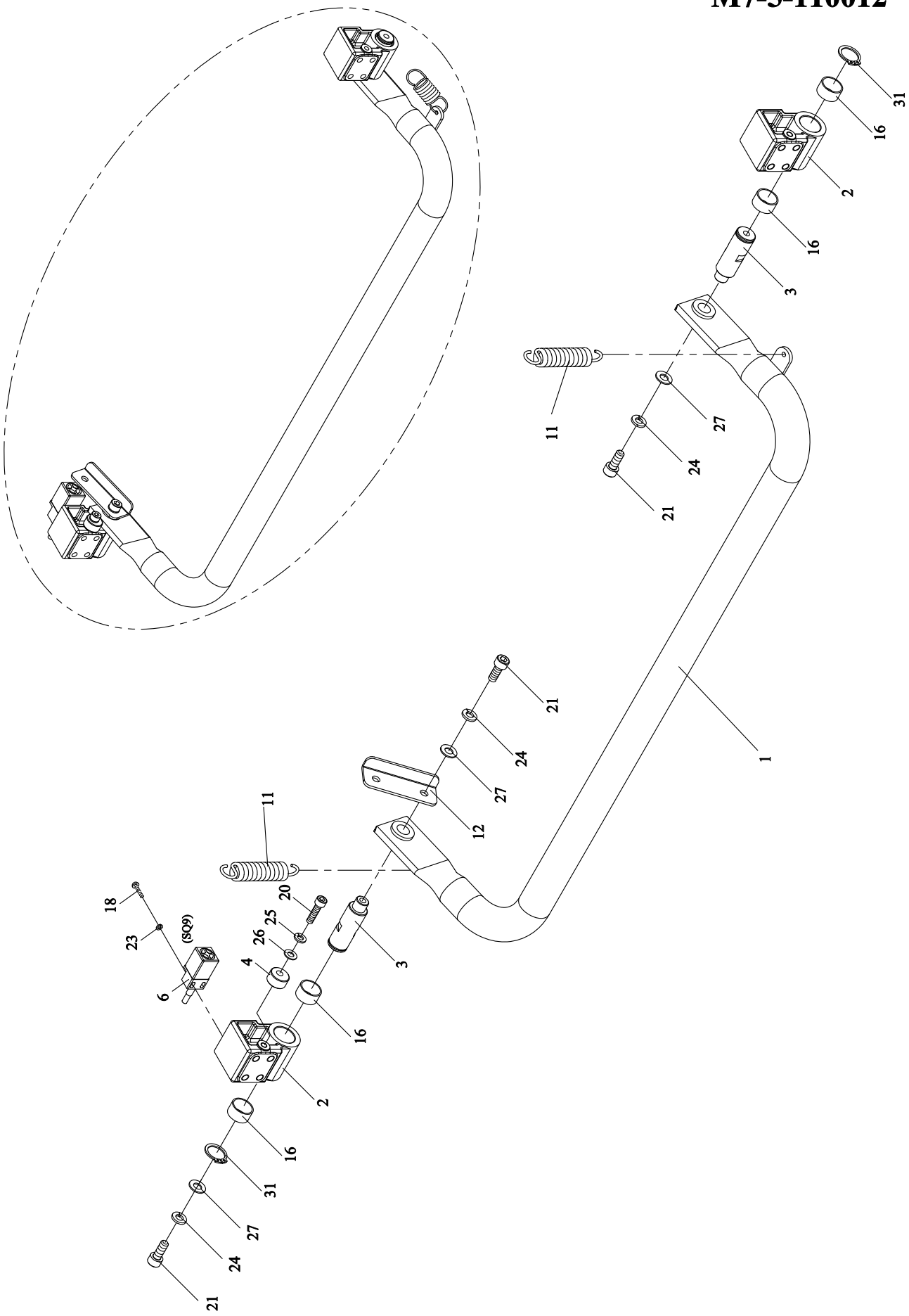

5-1-1 FOOT BAR ASS'Y M7-5-110002 M7-5-110012

REF. NO.	PART NO.	DESCRIPTION	Q'TY	REMARKS
	M7-5-110002	Foot Bar Ass'y (For 550W)	1	
	M7-5-110002S	Foot Bar Ass'y (Stainless Steel Model) (For 550W)	1	
	M7-5-110012	Foot Bar Ass'y (For 1250W/1650W)	1	
	M7-5-110012S	Foot Bar Ass'y (Stainless Steel Model) (For 1250W/1650W)	1	
	M7-5-110021	Foot Bar Ass'y (For 650W~1050W)	1	
	M7-5-110021S	Foot Bar Ass'y (Stainless Steel Model) (For 650W~1050W)	1	
1	M7-5-111101	Foot Bar (For 550W)	1	
	M7-5-111101S	Foot Bar (Stainless Steel Model)(For 550W)	1	
	M7-5-111111	Foot Bar (For 1250W/1650W)	1	
	M7-5-111111S	Foot Bar (Stainless Steel Model) (For 1250W/1650W)	1	
	M7-5-111120	Foot Bar (For 650W~1050W)	1	
	M7-5-111120S	Foot Bar (Stainless Steel Model) (For 650W~1050W)	1	
2	M7-5-111201	Block	2	
3	M7-5-111300	Shaft	2	
	M7-5-111300S	Shaft (Stainless Steel Model)	2	
4	M7-5-111400	Adjuster	1	
	M7-5-111400S	Adjuster (Stainless Steel Model)	1	
6	MV-6-20220	Proximity Sensor (X21)(SQ9)	1	SEE PAGE C153
11	TB-114	Return Spring	2	
	TB-114S	Return Spring (Stainless Steel Model)	2	
12	T7-5-30141	Sensor Plate	1	
16	MB1510	Metal Bushing, 1510	4	
18	PMS0320	PMS, M3×20	2	
	PMS0320S	PMS, M3×20 (Stainless Steel Model)	2	
20	HBS0520N	HBS, M5×20 (N)	1	
	HBS0520S	HBS, M5×20 (Stainless Steel Model)	1	
21	HBS0612N	HBS, M6×12 (N)	3	
	HBS0612S	HBS, M6×12 (Stainless Steel Model)	3	
23	SW03	SW, M3	2	
	SW03S	SW, M3 (Stainless Steel Model)	2	

5-1-1 FOOT BAR ASS'Y M7-5-110002 M7-5-110012

REF. NO.	PART NO.	DESCRIPTION	Q'TY	REMARKS
24	SW06	SW, M6	3	
	SW06S	SW, M6 (Stainless Steel Model)	3	
25	SW05	SW, M5	1	
	SW05S	SW, M5 (Stainless Steel Model)	1	
26	PW05	PW, M5	1	
	PW05S	PW, M5 (Stainless Steel Model)	1	
27	PW06C	PW, M6 (C)	3	
	PW06CS	PW, M6 (C)(Stainless Steel Model)	3	
31	SR15	Stop Ring, S-15	2	
	SR15S	Stop Ring, S-15 (Stainless Steel Model)	2	

5-2 **COVER GROUP** **M7-5-200002**
a. **(For 550W~1050W)** **M7-5-200012**

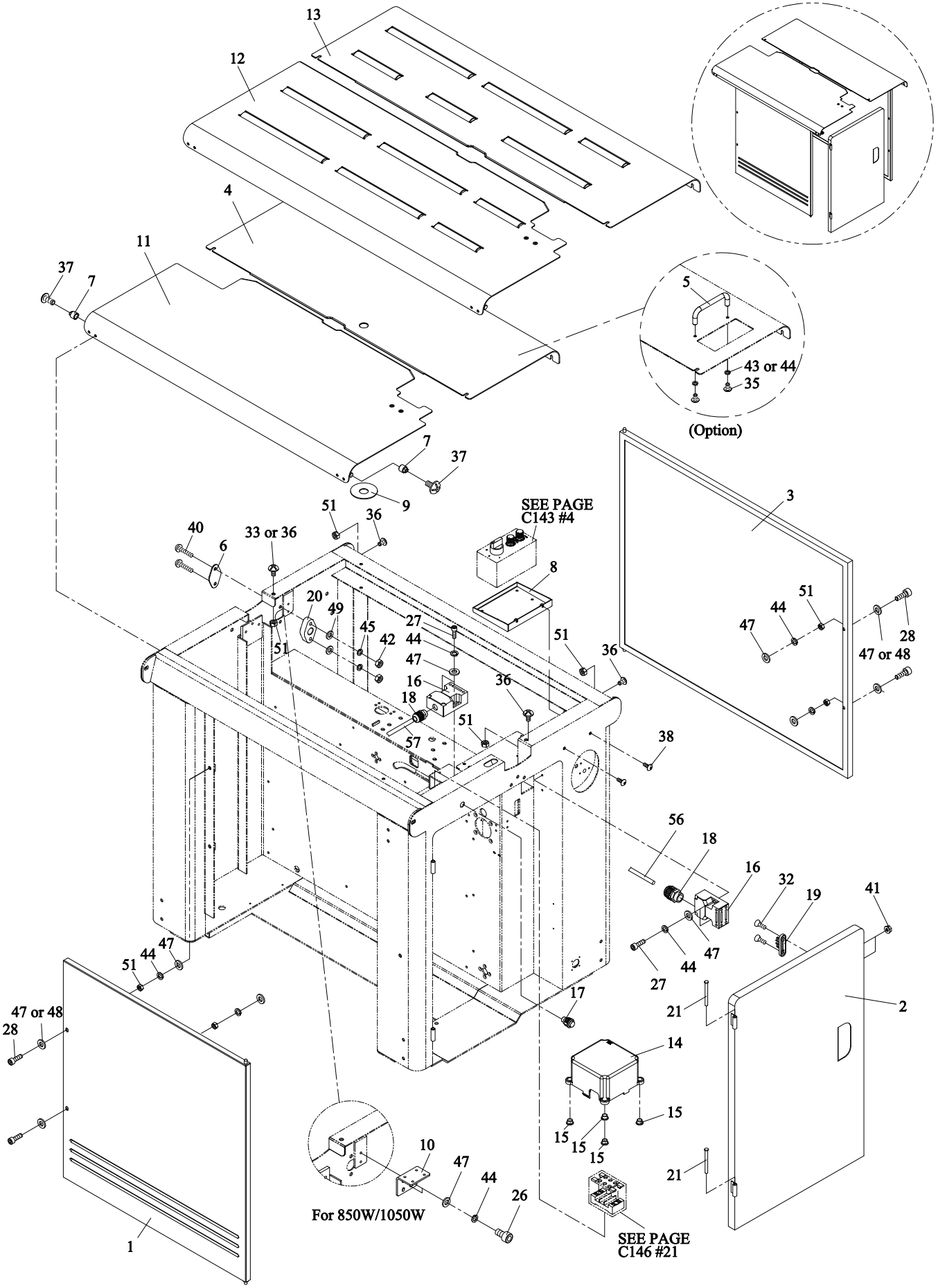

5-2 a. COVER GROUP (For 550W~1050W) M7-5-200002 M7-5-200012

REF. NO.	PART NO.	DESCRIPTION	Q'TY	REMARKS
	M7-5-200002	Cover Group (For 5-6mm, 550W)	1	
	M7-5-200002S	Cover Group (Stainless Steel Model) (For 5-6mm, 550W)	1	
	M7-5-200012	Cover Group (For 9mm, 550W)	1	
	M7-5-200012S	Cover Group (Stainless Steel Model) (For 9mm, 550W)	1	
	M7-5-200022	Cover Group (For 5-6mm, 650W)	1	
	M7-5-200022S	Cover Group (Stainless Steel Model) (For 5-6mm, 650W)	1	
	M7-5-200032	Cover Group (For 9mm, 650W)	1	
	M7-5-200032S	Cover Group (Stainless Steel Model) (For 9mm, 650W)	1	
	M7-5-200042	Cover Group (For 5-6mm, 850W/1050W)	1	
	M7-5-200042S	Cover Group (Stainless Steel Model) (For 5-6mm, 850W/1050W)	1	
	M7-5-200052	Cover Group (For 9mm, 850W/1050W)	1	
	M7-5-200052S	Cover Group (Stainless Steel Model) (For 9mm, 850W/1050W)	1	
1	M7-5-201102	Front Door (For 550W)	1	
	M7-5-201102S	Front Door (Stainless Steel Model)(For 550W)	1	
	M7-5-201111	Front Door (For 650W~1050W)	1	
	M7-5-201111S	Front Door (Stainless Steel Model) (For 650W~1050W)	1	
2	M7-5-201201	Side Door	1	
	M7-5-201201S	Side Door (Stainless Steel Model)	1	
3	M7-5-201301	Rear Door (For 550W)	1	
	M7-5-201301S	Rear Door (Stainless Steel Model)(For 550W)	1	
	M7-5-201311	Rear Door (For 650W~1050W)	1	
	M7-5-201311S	Rear Door (Stainless Steel Model) (For 650W~1050W)	1	
4	M7-5-201401	Upper Table Rear (For 550W)	1	
	M7-5-201401S	Upper Table Rear (Stainless Steel Model) (For 550W)	1	
	M7-5-201411	Upper Table Rear (For Photo Eye)(For 550W) (Option)	1	
	M7-5-201411S	Upper Table Rear (For Photo Eye)(Stainless Steel Model)(For 550W)(Option)	1	
	M7-5-201421	Upper Table Rear (For 650W)	1	
	M7-5-201421S	Upper Table Rear (Stainless Steel Model) (For 650W)	1	
	M7-5-201431	Upper Table Rear (For Photo Eye) (For 650W)(Option)	1	
	M7-5-201431S	Upper Table Rear (For Photo Eye)(Stainless Steel Model)(For 650W)(Option)	1	

5-2 COVER GROUP M7-5-200002
a. (For 550W~1050W) M7-5-200012

REF. NO.	PART NO.	DESCRIPTION	Q'TY	REMARKS
5	M7-6-102100	Handle (Option)	1	
	M7-6-102100S	Handle (Stainless Steel Model)(Option)	1	
6	M7-5-201600	Cover (For 550W/650W)	1	
	M7-5-201600S	Cover (Stainless Steel Model) (For 550W/650W)	1	
7	M7-5-201701	Table Support	2	
	M7-5-201701S	Table Support (Stainless Steel Model)	2	
8	M7-5-202500	Bracket (Option)	1	
9	LA-50240	Label (Option)	1	
10	M7-5-202200	Guide LH plate (For 850W/1050W)	1	
11	M7-5-210001	Upper Table Front Ass'y (For 5-6mm, 550W)	1	SEE PAGE C121
	M7-5-210001S	Upper Table Front Ass'y (Stainless Steel Model)(For 5-6mm, 550W)	1	
	M7-5-210011	Upper Table Front Ass'y (For 9mm, 550W)	1	
	M7-5-210011S	Upper Table Front Ass'y (Stainless Steel Model)(For 9mm, 550W)	1	
	M7-5-210031	Upper Table Front Ass'y (For 5-6mm, 650W)	1	
	M7-5-210031S	Upper Table Front Ass'y (Stainless Steel Model)(For 5-6mm, 650W)	1	
	M7-5-210041	Upper Table Front Ass'y (For 9mm, 650W)	1	
	M7-5-210041S	Upper Table Front Ass'y (Stainless Steel Model)(For 9mm, 650W)	1	
12	M7-5-220001	Upper Table Front Ass'y (For 5-6mm, 850W/1050W)	1	SEE PAGE C123
	M7-5-220001S	Upper Table Front Ass'y (Stainless Steel Model)(For 5-6mm, 850W/1050W)	1	
	M7-5-220011	Upper Table Front Ass'y (For 9mm, 850W/1050W)	1	
	M7-5-220011S	Upper Table Front Ass'y (Stainless Steel Model)(For 9mm, 850W/1050W)	1	
13	M7-5-230001	Upper Table Rear Ass'y (For 850W/1050W)	1	SEE PAGE C127
	M7-5-230001S	Upper Table Rear Ass'y (Stainless Steel Model) (For 850W/1050W)	1	
	M7-5-230011	Upper Table Rear Ass'y (For Photo Eye) (For 850W/1050W)(Option)	1	
	M7-5-230011S	Upper Table Rear Ass'y (For Photo Eye) (Stainless Steel Model)(For 850W/1050W) (Option)	1	
14	M7-5-101901	Cover	1	
15	T7-5-20210	Rubber Plug	4	
16	TK-035	Interlock Safety Switch	2	
17	H45-60160	Sealing Switch	1	
18	T5-2-10500	Cable Gland (PG9)	2	
19	T7-5-10210	Switch Actuator	1	

5-2 COVER GROUP M7-5-200002
a. (For 550W~1050W) M7-5-200012

REF. NO.	PART NO.	DESCRIPTION	Q'TY	REMARKS
20	T7-2-10280	Block (For 550W/650W)	1	
	T7-2-10281	Block (For 850W/1050W)	1	
21	T6-6-60130	Pin	2	
26	HBS0508N	HBS, M5×8 (N)(For 850W/1050W)	2	
	HBS0508S	HBS, M5×8 (Stainless Steel Model) (For 850W/1050W)	2	
27	HBS0516N	HBS, M5×16 (N)	4	
28	HBS0525N	HBS, M5×25 (N)	4	
	HBS0525S	HBS, M5×25 (Stainless Steel Model)	4	
32	FMS0512	FMS, M5×12	2	
33	FMS0520S	FMS, M5×20 (SUS)(For 850W/1050W)	1	
35	TMS0512	TMS, M5×12 (Option)	2	
	TMS0512S	TMS, M5×12 (Stainless Steel Model)(Option)	2	
36	TMS0520S	TMS, M5×20 (SUS)(For 550W/650W)	4	
		TMS, M5×20 (SUS)(For 850W/1050W)	3	
37	TMS0610S	TMS, M6×10 (SUS)	2	
38	THS0508N	THS, M5×8 (N)(Option)	2	
	THS0508S	THS, M5×8 (Stainless Steel Model)(Option)	2	
40	THS0630N	THS, M6×30 (N)	2	
	THS0630S	THS, M6×30 (Stainless Steel Model)	2	
41	FLG05	FLG, M5	2	
42	HN06	HN, M6	2	
43	SW05S	SW, M5 (Stainless Steel Model)(Option)	2	
44	SW05	SW, M5 (550W/650W)	8	
		SW, M5 (550W/650W)(Option)	10	
		SW, M5 (850W/1050W)	10	
		SW, M5 (850W/1050W)(Option)	12	
45	SW06	SW, M6	2	
47	PW05	PW, M5 (For 550W/650W)	12	
		PW, M5 (For 850W/1050W)	14	
48	PW05S	PW, M5 (Stainless Steel Model)	4	
49	PW06A	PW, M6 (A)	2	
51	NTE05	NTE, M5	8	
56	EW720005B001	Wire Ass'y (For 550W)	1	
	EW720010E001	Wire Ass'y (For 650W~1050W)	1	
57	EW720005B002	Wire Ass'y (For 550W)	1	
	EW720006C002	Wire Ass'y (For 650W~1050W)	1	

5-2 **COVER GROUP** **M7-5-200062**
b. **(For 1250W/1650W)** **M7-5-200072**

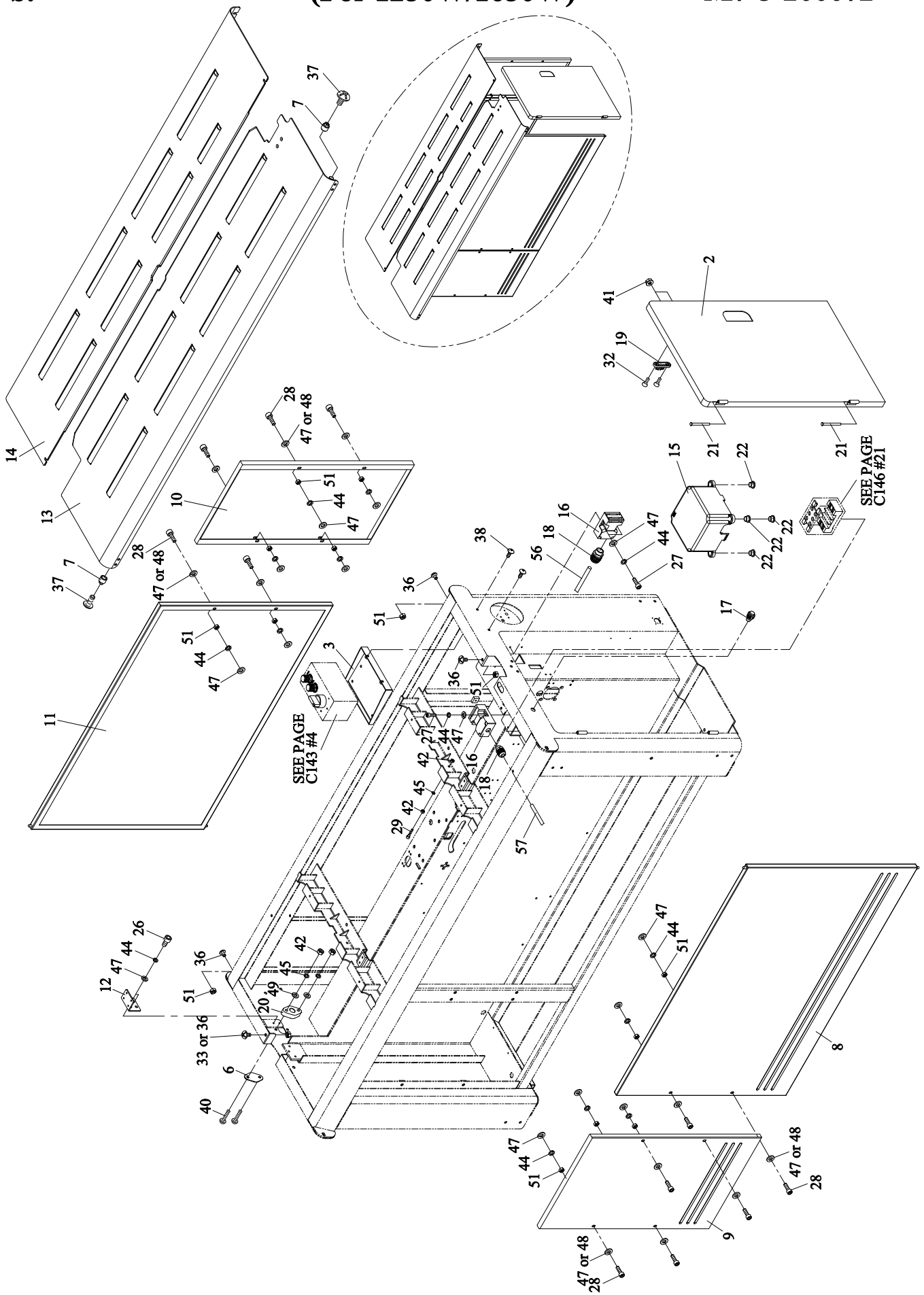

5-2 b. COVER GROUP (For 1250W/1650W) M7-5-200062 M7-5-200072

REF. NO.	PART NO.	DESCRIPTION	Q'TY	REMARKS
	M7-5-200062	Cover Group (For 5-6mm, 1250W)	1	
	M7-5-200062S	Cover Group (Stainless Steel Model) (For 5-6mm, 1250W)	1	
	M7-5-200072	Cover Group (For 9mm, 1250W)	1	
	M7-5-200072S	Cover Group (Stainless Steel Model) (For 9mm, 1250W)	1	
	M7-5-200082	Cover Group (For 5-6mm, 1650W)	1	
	M7-5-200082S	Cover Group (Stainless Steel Model) (For 5-6mm, 1650W)	1	
	M7-5-200092	Cover Group (For 9mm, 1650W)	1	
	M7-5-200092S	Cover Group (Stainless Steel Model) (For 9mm, 1650W)	1	
2	M7-5-201201	Side Door	1	
	M7-5-201201S	Side Door (Stainless Steel Model)	1	
3	M7-5-202500	Bracket (Option)	1	
6	M7-5-201600	Cover (Only 1250W)	1	
	M7-5-201600S	Cover (Stainless Steel Model)(Only 1250W)	1	
7	M7-5-201701	Table Support	2	
	M7-5-201701S	Table Support (Stainless Steel Model)	2	
8	M7-5-201130	Front Door	1	
	M7-5-201130S	Front Door (Stainless Steel Model)	1	
9	M7-5-201901	Front Cover	1	
	M7-5-201901S	Front Cover (Stainless Steel Model)	1	
10	M7-5-202001	Rear Cover	1	
	M7-5-202001S	Rear Cover (Stainless Steel Model)	1	
11	M7-5-201320	Rear Door	1	
	M7-5-201320S	Rear Door (Stainless Steel Model)	1	
12	M7-5-202200	Guide LH Plate (Only 1650W)	1	
13	M7-5-220041	Upper Table Front Ass'y (For 5-6mm, 1250W)	1	SEE PAGE C123
	M7-5-220041S	Upper Table Front Ass'y (Stainless Steel Model)(For 5-6mm, 1250W)	1	
	M7-5-220051	Upper Table Front Ass'y (For 9mm, 1250W)	1	
	M7-5-220051S	Upper Table Front Ass'y (Stainless Steel Model)(For 9mm, 1250W)	1	
	M7-5-220071	Upper Table Front Ass'y (For 5-6mm, 1650W)	1	
	M7-5-220071S	Upper Table Front Ass'y (Stainless Steel Model)(For 5-6mm, 1650W)	1	
	M7-5-220081	Upper Table Front Ass'y (For 9mm, 1650W)	1	
	M7-5-220081S	Upper Table Front Ass'y (Stainless Steel Model)(For 9mm, 1650W)	1	

5-2 COVER GROUP M7-5-200062
b. (For 1250W/1650W) M7-5-200072

REF. NO.	PART NO.	DESCRIPTION	Q'TY	REMARKS
14	M7-5-230061	Upper Table Rear Ass'y (For 1250W)	1	SEE PAGE C127
	M7-5-230061S	Upper Table Rear Ass'y (Stainless Steel Model)(For 1250W)	1	
	M7-5-230071	Upper Table Rear Ass'y (For Photo Eye) (For 1250W)(Option)	1	
	M7-5-230071S	Upper Table Rear Ass'y (For Photo Eye) (Stainless Steel Model)(For 1250W) (Option)	1	
	M7-5-230081	Upper Table Rear Ass'y (For 1650W)	1	
	M7-5-230081S	Upper Table Rear Ass'y (Stainless Steel Model)(For 1650W)	1	
	M7-5-230091	Upper Table Rear Ass'y (For Photo Eye) (For 1650W)(Option)	1	
	M7-5-230091S	Upper Table Rear Ass'y (For Photo Eye) (Stainless Steel Model)(For 1650W) (Option)	1	
15	M7-5-101901	Cover	1	
16	TK-035	Interlock Safety Switch	2	
17	H45-60160	Sealing Switch	1	
18	T5-2-10500	Cable Gland (PG9)	2	
19	T7-5-10210	Switch Actuator	1	
20	T7-2-10280	Block (For 1250W)	1	
	T7-2-10281	Block (For 1650W)	1	
21	T6-6-60130	Pin	2	
22	T7-5-20210	Rubber Plug	4	
26	HBS0508N	HBS, M5×8 (N)(For 1650W)	2	
27	HBS0516N	HBS, M5×16 (N)	4	
28	HBS0525N	HBS, M5×25 (N)	12	
	HBS0525S	HBS, M5×25 (Stainless Steel Model)	12	
29	HBS0625N	HBS, M6×25 (N)	1	
32	FMS0512	FMS, M5×12	2	
33	FMS0520S	FMS, M5×20 (SUS)(Only 1650W)	1	
36	TMS0520S	TMS, M5×20 (SUS)(For 1250W)	4	
		TMS, M5×20 (SUS)(For 1650W)	3	
37	TMS0610S	TMS, M6×10 (SUS)	2	
38	THS0508N	THS, M5×8 (N)(Option)	2	
	THS0508S	THS, M5×8 (Stainless Steel Model)(Option)	2	

5-2 COVER GROUP M7-5-200062
b. (For 1250W/1650W) M7-5-200072

REF. NO.	PART NO.	DESCRIPTION	Q'TY	REMARKS
40	THS0630N	THS, M6×30 (N)	2	
	THS0630S	THS, M6×30 (Stainless Steel Model)	2	
41	FLG05	FLG, M5	2	
42	HN06	HN, M6	4	
44	SW05	SW, M5 (For 1250W)	16	
		SW, M5 (For 1650W)	18	
45	SW06	SW, M6	3	
47	PW05	PW, M5 (For 1250W)	28	
		PW, M5 (For 1650W)	30	
48	PW05S	PW, M5 (Stainless Steel Model)	12	
49	PW06A	PW, M6 (A)	2	
51	NTE05	NTE, M5	16	
56	EW720012F001	Wire Ass'y (For 1250W/1650W)	1	
57	EW720012F002	Wire Ass'y (For 1250W/1650W)	1	

5-2-1 UPPER TABLE FRONT ASS'Y (For 550W/650W) M7-5-210001 M7-5-210011

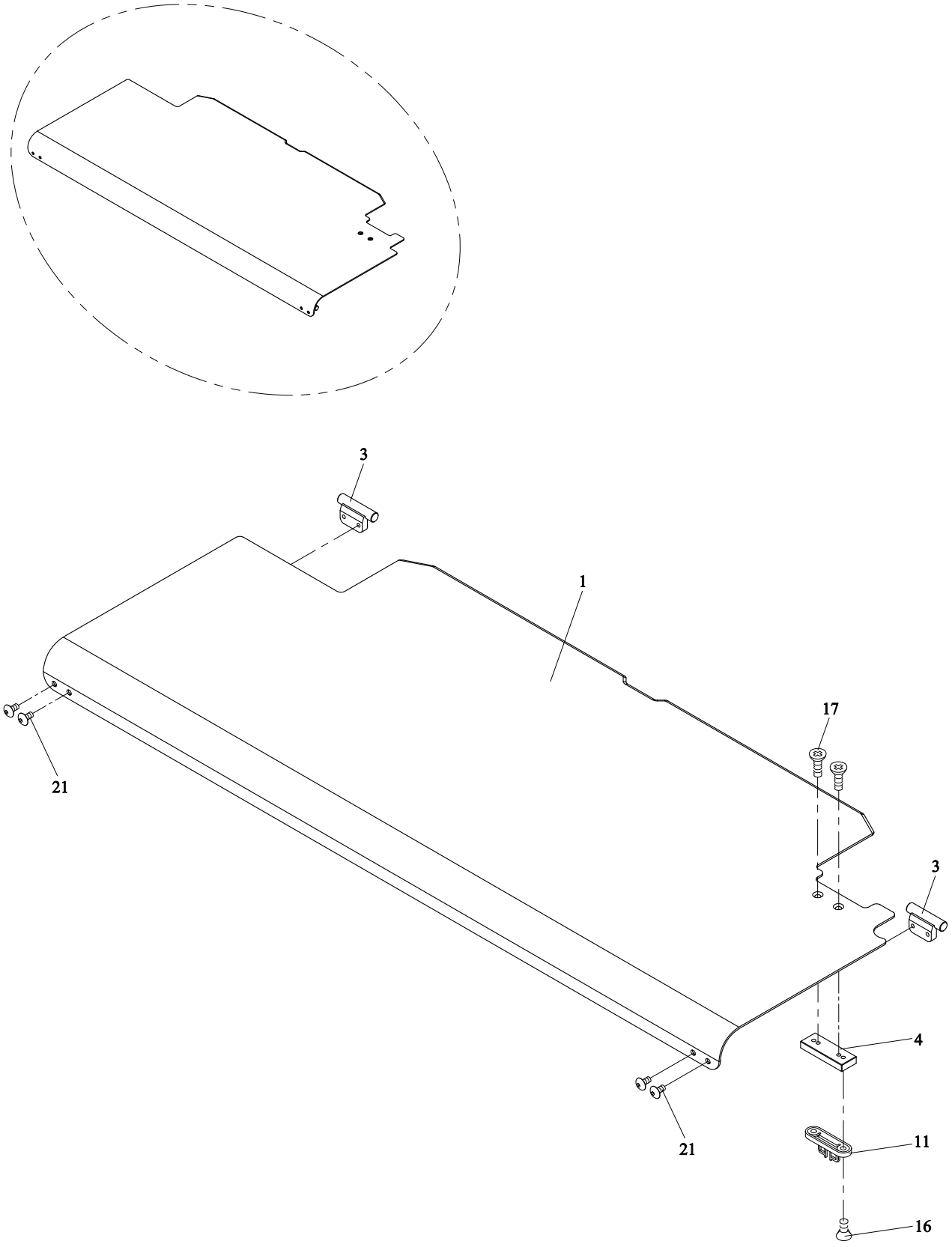

5-2-1 UPPER TABLE FRONT ASS'Y (For 550W/650W) M7-5-210001 M7-5-210011

REF. NO.	PART NO.	DESCRIPTION	Q'TY	REMARKS
	M7-5-210001	Upper Table Front Ass'y (For 5-6mm, 550W)	1	
	M7-5-210001S	Upper Table Front Ass'y (Stainless Steel Model)(For 5-6mm, 550W)	1	
	M7-5-210011	Upper Table Front Ass'y (For 9mm, 550W)	1	
	M7-5-210011S	Upper Table Front Ass'y (Stainless Steel Model)(For 9mm, 550W)	1	
	M7-5-210031	Upper Table Front Ass'y (For 5-6mm, 650W)	1	
	M7-5-210031S	Upper Table Front Ass'y (Stainless Steel Model)(For 5-6mm, 650W)	1	
	M7-5-210041	Upper Table Front Ass'y (For 9mm, 650W)	1	
	M7-5-210041S	Upper Table Front Ass'y (Stainless Steel Model)(For 9mm, 650W)	1	
1	M7-5-211101	Upper Table Front (For 5-6mm, 550W)	1	
	M7-5-211101S	Upper Table Front (Stainless Steel Model) (For 5-6mm, 550W)	1	
	M7-5-211111	Upper Table Front (For 9mm, 550W)	1	
	M7-5-211111S	Upper Table Front (Stainless Steel Model) (For 9mm, 550W)	1	
	M7-5-211131	Upper Table Front (For 5-6mm, 650W)	1	
	M7-5-211131S	Upper Table Front (Stainless Steel Model) (For 5-6mm, 650W)	1	
	M7-5-211141	Upper Table Front (For 9mm, 650W)	1	
	M7-5-211141S	Upper Table Front (Stainless Steel Model) (For 9mm, 650W)	1	
3	M7-5-211301	Shaft	2	
	M7-5-211301S	Shaft (Stainless Steel Model)	2	
4	M7-5-211400	Bracket	1	
11	T7-5-10210	Switch Actuator	1	
16	FMS0510N	FMS, M5×10 (N)	2	
17	FMS0510S	FMS, M5×10 (SUS)	2	
21	THS0510S	THS, M5×10 (SUS)	4	

5-2-2 UPPER TABLE FRONT ASS'Y (For 850W~1650W)

M7-5-220001
M7-5-220011

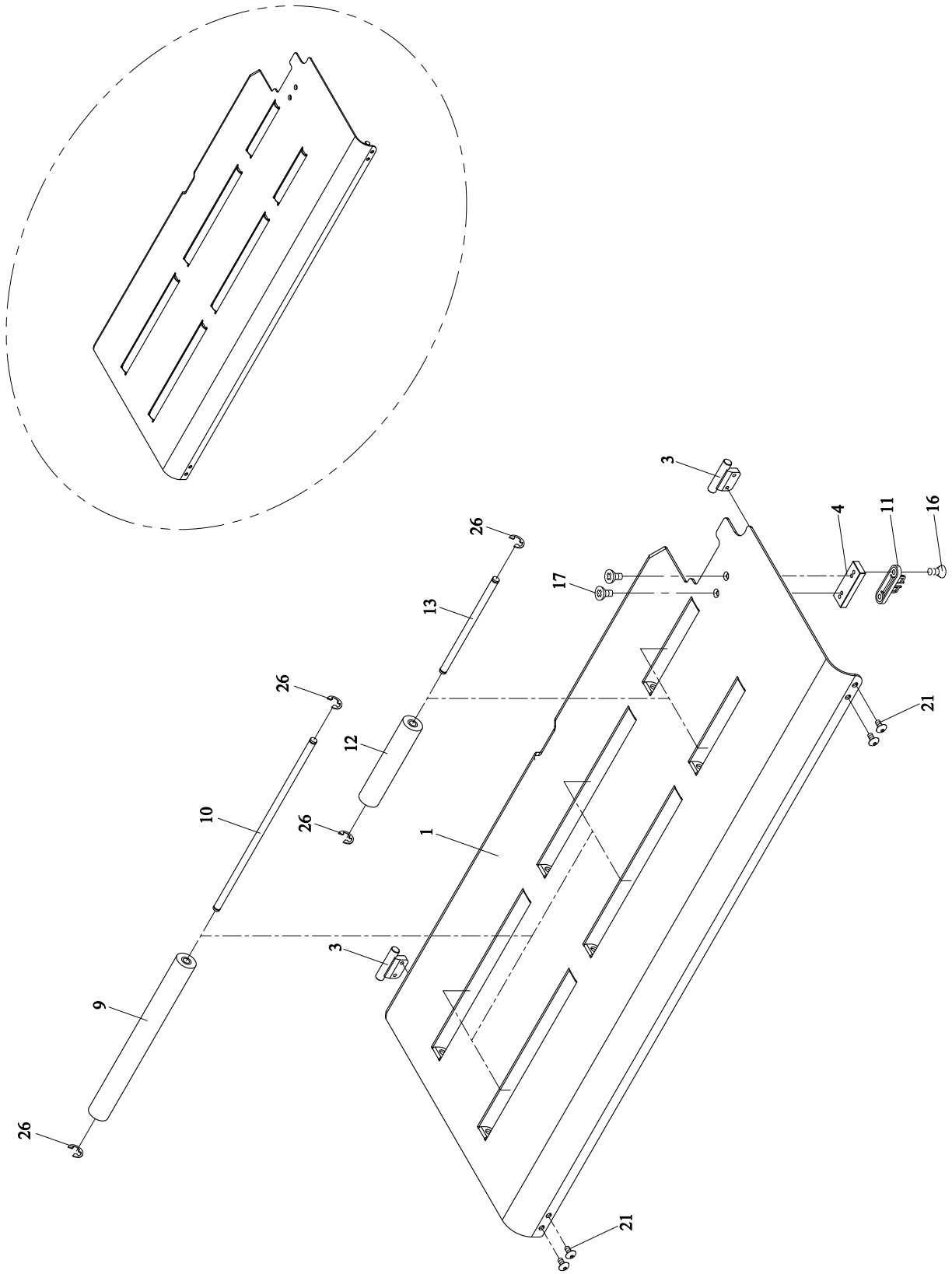

5-2-2 UPPER TABLE FRONT ASS'Y (For 850W~1650W) M7-5-220001 M7-5-220011

REF. NO.	PART NO.	DESCRIPTION	Q'TY	REMARKS
	M7-5-220001	Upper Table Front Ass'y (For 5-6mm, 850W~1050W)	1	
	M7-5-220001S	Upper Table Front Ass'y (Stainless Steel Model)(For 5-6mm, 850W/1050W)	1	
	M7-5-220011	Upper Table Front Ass'y (For 9mm, 850W/1050W)	1	
	M7-5-220011S	Upper Table Front Ass'y (Stainless Steel Model)(For 9mm, 850W/1050W)	1	
	M7-5-220041	Upper Table Front Ass'y (For 5-6mm, 1250W)	1	
	M7-5-220041S	Upper Table Front Ass'y (Stainless Steel Model)(For 5-6mm, 1250W)	1	
	M7-5-220051	Upper Table Front Ass'y (For 9mm, 1250W)	1	
	M7-5-220051S	Upper Table Front Ass'y (Stainless Steel Model)(For 9mm, 1250W)	1	
	M7-5-220071	Upper Table Front Ass'y (For 5-6mm, 1650W)	1	
	M7-5-220071S	Upper Table Front Ass'y (Stainless Steel Model)(For 5-6mm, 1650W)	1	
	M7-5-220081	Upper Table Front Ass'y (For 9mm, 1650W)	1	
	M7-5-220081S	Upper Table Front Ass'y (Stainless Steel Model)(For 9mm, 1650W)	1	
1	M7-5-221101	Upper Table Front (For 5-6mm, 850W/1050W)	1	
	M7-5-221101S	Upper Table Front (Stainless Steel Model) (For 5-6mm, 850W/1050W)	1	
	M7-5-221111	Upper Table Front (For 9mm, 850W/1050W)	1	
	M7-5-221111S	Upper Table Front (Stainless Steel Model) (For 9mm, 850W/1050W)	1	
	M7-5-221141	Upper Table Front (For 5-6mm, 1250W)	1	
	M7-5-221141S	Upper Table Front (Stainless Steel Model) (For 5-6mm, 1250W)	1	
	M7-5-221151	Upper Table Front (For 9mm, 1250W)	1	
	M7-5-221151S	Upper Table Front (Stainless Steel Model) (For 9mm, 1250W)	1	
	M7-5-221171	Upper Table Front (For 5-6mm, 1650W)	1	
	M7-5-221171S	Upper Table Front (Stainless Steel Model) (For 5-6mm, 1650W)	1	
	M7-5-221181	Upper Table Front (For 9mm, 1650W)	1	
	M7-5-221181S	Upper Table Front (Stainless Steel Model) (For 9mm, 1650W)	1	
3	M7-5-211301	Shaft	2	
	M7-5-211301S	Shaft (Stainless Steel Model)	2	
4	M7-5-211400	Bracket	1	

5-2-2 UPPER TABLE FRONT ASS'Y (For 850W~1650W) M7-5-220001 M7-5-220011

REF. NO.	PART NO.	DESCRIPTION	Q'TY	REMARKS
9	T6-5-11120	Table Roller (250mm)(For 850W/1050W)	4	
		Table Roller (250mm)(For 1250W/1650W)	8	
	T6-5-11121	Table Roller (250mm)(Stainless Steel Model) (For 850W/1050W)	4	
		Table Roller (250mm)(Stainless Steel Model) (For 1250W/1650W)	8	
10	T6-5-11130	Table Roller Shaft (For 850W/1050W)	4	
		Table Roller Shaft (For 1250W/1650W)	8	
	T6-5-11131	Table Roller Shaft (Stainless Steel Model) (For 850W/1050W)	4	
		Table Roller Shaft (Stainless Steel Model) (For 1250W/1650W)	8	
11	T7-5-10210	Switch Actuator	1	
12	T7-5-40410	Table Roller (130mm)(For 850W/1050W)	2	
	T7-5-40411	Table Roller (130mm)(Stainless Steel Model) (For 850W/1050W)	2	
13	T7-5-40420	Table Roller Shaft (For 850W/1050W)	2	
	T7-5-40420S	Table Roller Shaft (Stainless Steel Model) (For 850W/1050W)	2	
16	FMS0510N	FMS, M5×10 (N)	2	
17	FMS0510S	FMS, M5×10 (SUS)	2	
21	THS0510S	THS, M5×10 (SUS)	4	
26	ER07	Snap Ring, E-7 (For 850W/1050W)	12	
		Snap Ring, E-7 (For 1250W/1650W)	16	
	ER07S	Snap Ring, E-7 (Stainless Steel Model) (For 850W/1050W)	12	
		Snap Ring, E-7 (Stainless Steel Model) (For 1250W/1650W)	16	

5-2-3 UPPER TABLE REAR ASS'Y (For 850W~1650W) M7-5-230001 M7-5-230011

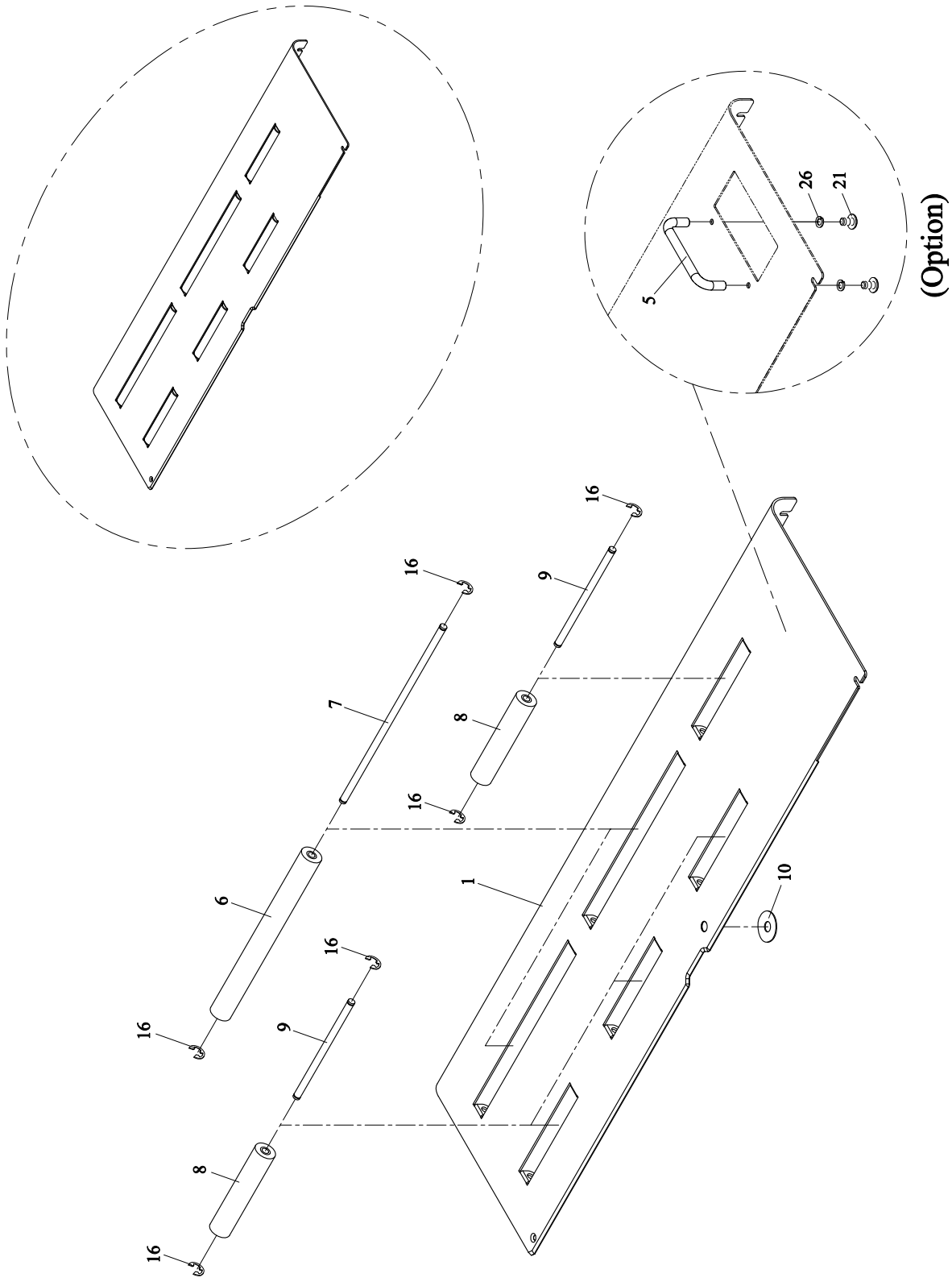

5-2-3 UPPER TABLE REAR ASS'Y (For 850W~1650W) M7-5-230001 M7-5-230011

REF. NO.	PART NO.	DESCRIPTION	Q'TY	REMARKS
	M7-5-230001	Upper Table Rear Ass'y (For 850W/1050W)	1	
	M7-5-230001S	Upper Table Rear Ass'y (Stainless Steel Model) (For 850W/1050W)	1	
	M7-5-230011	Upper Table Rear Ass'y (For Photo Eye) (For 850W/1050W)(Option)	1	
	M7-5-230011S	Upper Table Rear Ass'y (For Photo Eye) (Stainless Steel Model)(For 850W/1050W) (Option)	1	
	M7-5-230061	Upper Table Rear Ass'y (For 1250W)	1	
	M7-5-230061S	Upper Table Rear Ass'y (Stainless Steel Model)(For 1250W)	1	
	M7-5-230071	Upper Table Rear Ass'y (For Photo Eye) (For 1250W)(Option)	1	
	M7-5-230071S	Upper Table Rear Ass'y (For Photo Eye) (Stainless Steel Model)(For 1250W) (Option)	1	
	M7-5-230081	Upper Table Rear Ass'y (For 1650W)	1	
	M7-5-230081S	Upper Table Rear Ass'y (Stainless Steel Model)(For 1650W)	1	
	M7-5-230091	Upper Table Rear Ass'y (For Photo Eye) (For 1650W)(Option)	1	
	M7-5-230091S	Upper Table Rear Ass'y (For Photo Eye) (Stainless Steel Model)(For 1650W) (Option)	1	
1	M7-5-231101	Upper Table Rear (For 850W/1050W)	1	
	M7-5-231101S	Upper Table Rear (Stainless Steel Model) (For 850W/1050W)	1	
	M7-5-231111	Upper Table Rear (For Photo Eye) (For 850W/1050W)(Option)	1	
	M7-5-231111S	Upper Table Rear (For Photo Eye)(Stainless Steel Model)(For 850W/1050W)(Option)	1	
	M7-5-231161	Upper Table Rear (For 1250W)	1	
	M7-5-231161S	Upper Table Rear (Stainless Steel Model) (For 1250W)	1	
	M7-5-231171	Upper Table Rear (For Photo Eye)(For 1250W) (Option)	1	
	M7-5-231171S	Upper Table Rear (For Photo Eye)(Stainless Steel Model)(For 1250W)(Option)	1	
	M7-5-231181	Upper Table Rear (For 1650W)	1	
	M7-5-231181S	Upper Table Rear (Stainless Steel Model) (For 1650W)	1	
	M7-5-231191	Upper Table Rear (For Photo Eye)(For 1650W) (Option)	1	

5-2-3 UPPER TABLE REAR ASS'Y (For 850W~1650W) M7-5-230001 M7-5-230011

REF. NO.	PART NO.	DESCRIPTION	Q'TY	REMARKS
	M7-5-231191S	Upper Table Rear (For Photo Eye)(Stainless Steel Model)(For 1650W)(Option)	1	
5	M7-6-102100	Handle (Option)	1	
	M7-6-102100S	Handle (Stainless Steel Model)(Option)	1	
6	T6-5-11120	Table Roller (250mm)(For 850W/1050W)	2	
		Table Roller (250mm)(For 1250W/1650W)	7	
	T6-5-11121	Table Roller (250mm)(Stainless Steel Model) (For 850W/1050W)	2	
		Table Roller (250mm)(Stainless Steel Model) (For 1250W/1650W)	7	
7	T6-5-11130	Table Roller Shaft (For 850W/1050W)	2	
		Table Roller Shaft (For 1250W/1650W)	7	
	T6-5-11131	Table Roller Shaft (Stainless Steel Model) (For 850W/1050W)	2	
		Table Roller Shaft (Stainless Steel Model) (For 1250W/1650W)	7	
8	T7-5-40410	Table Roller (130mm)(For 850W/1050W)	4	
		Table Roller (130mm)(For 1250W/1650W)	1	
	T7-5-40411	Table Roller (Stainless Steel Model) (For 850W/1050W)	4	
		Table Roller (Stainless Steel Model) (For 1250W/1650W)	1	
9	T7-5-40420	Table Roller Shaft (For 850W/1050W)	4	
		Table Roller Shaft (For 1250W/1650W)	1	
	T7-5-40420S	Table Roller Shaft (Stainless Steel Model) (For 850W/1050W)	4	
		Table Roller Shaft (Stainless Steel Model) (For 1250W/1650W)	1	
10	LA-50240	Label (Option)	1	
16	ER07	Snap Ring, E-7 (For 850W/1050W)	12	
		Snap Ring, E-7 (For 1250W/1650W)	16	
	ER07S	Snap Ring, E-7 (Stainless Steel Model) (For 850W/1050W)	12	
		Snap Ring, E-7 (Stainless Steel Model) (For 1250W/1650W)	16	
21	TMS0512	TMS, M5×12 (Option)	2	
	TMS0512S	TMS, M5×12 (Stainless Steel Model)(Option)	2	
26	SW05	SW, M5 (Option)	2	
	SW05S	SW, M5 (Stainless Steel Model)(Option)	2	

5-3 EXTENSION TABLE GROUP M7-5-300001
(For 850W/1050W/1650W) M7-5-300011

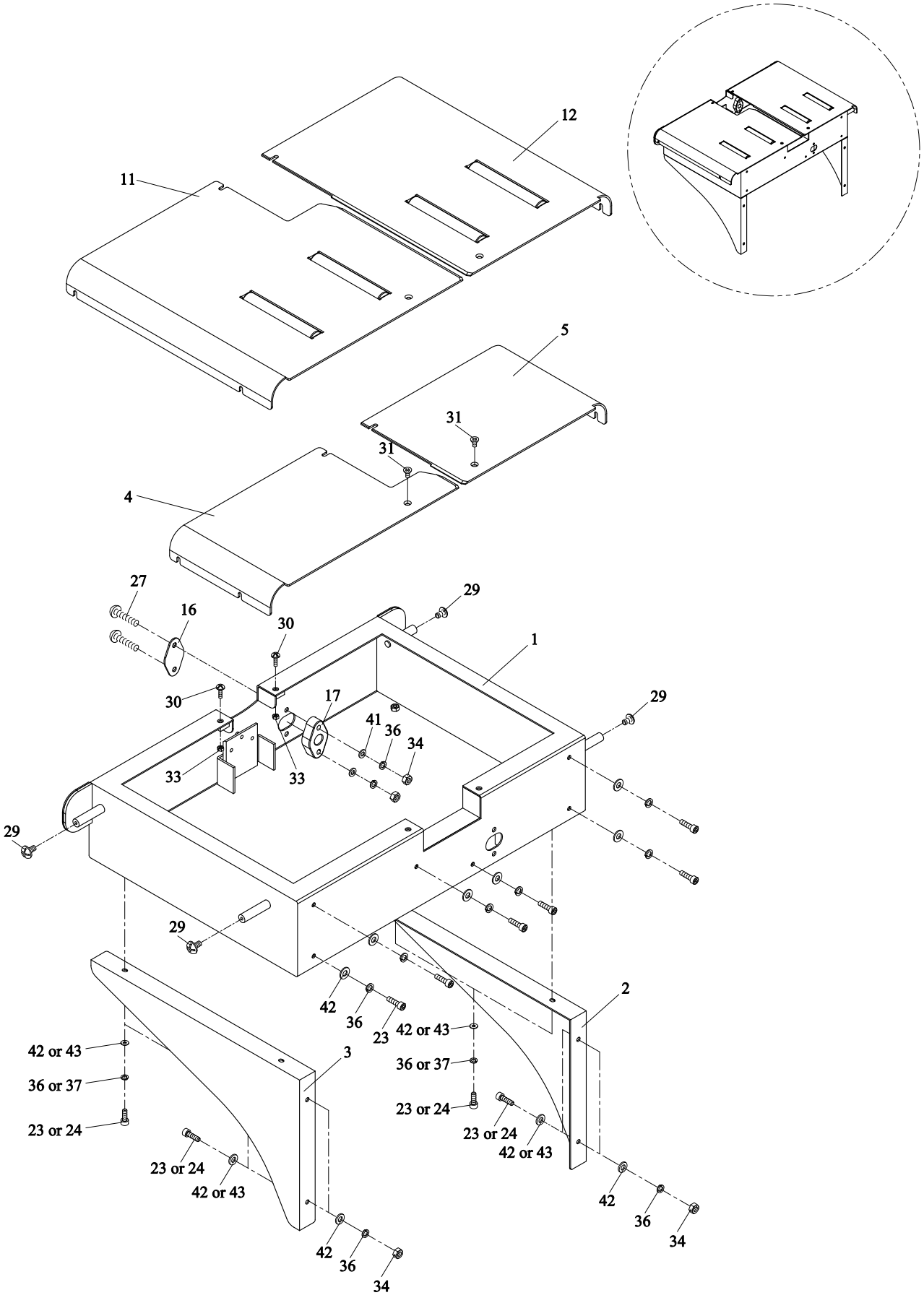

5-3 EXTENSION TABLE GROUP (For 850W/1050W/1650W) M7-5-300001 M7-5-300011

REF. NO.	PART NO.	DESCRIPTION	Q'TY	REMARKS
	M7-5-300001	Extension Table Group (For 5-6mm, 850W)	1	
	M7-5-300001S	Extension Table Group (Stainless Steel Model) (For 5-6mm, 850W)	1	
	M7-5-300011	Extension Table Group (For 9mm, 850W)	1	
	M7-5-300011S	Extension Table Group (Stainless Steel Model) (For 9mm, 850W)	1	
	M7-5-300021	Extension Table Group (For 5-6mm, 1050W/1650W)	1	
	M7-5-300021S	Extension Table Group (Stainless Steel Model) (For 5-6mm, 1050W/1650W)	1	
	M7-5-300031	Extension Table Group (For 9mm, 1050W/1650W)	1	
	M7-5-300031S	Extension Table Group (Stainless Steel Model) (For 9mm, 1050W/1650W)	1	
1	M7-5-301101	Extension Table (For 850W)	1	
	M7-5-301101S	Extension Table (Stainless Steel Model) (For 850W)	1	
	M7-5-301111	Extension Table (For 1050W/1650W)	1	
	M7-5-301111S	Extension Table (Stainless Steel Model) (For 1050W/1650W)	1	
2	M7-5-301200	Rack (Right)(For 1050W/1650W)	1	
	M7-5-301200S	Rack (Right)(Stainless Steel Model) (For 1050W/1650W)	1	
3	M7-5-301300	Rack (Left)(For 1050W/1650W)	1	
	M7-5-301300S	Rack (Left)(Stainless Steel Model) (For 1050W/1650W)	1	
4	M7-5-301401	Upper Table Front (For 5-6mm, 850W)	1	
	M7-5-301401S	Upper Table Front (Stainless Steel Model) (For 5-6mm, 850W)	1	
	M7-5-301411	Upper Table Front (For 9mm, 850W)	1	
	M7-5-301411S	Upper Table Front (Stainless Steel Model) (For 9mm, 850W)	1	
5	M7-5-301501	Upper Table Rear (Only 850W)	1	
	M7-5-301501S	Upper Table Rear (Only 850W)(Stainless Steel Model)	1	
11	M7-5-310001	Upper Table Front Ass'y (For 5-6mm, 1050W/1650W)	1	SEE PAGE C135
	M7-5-310001S	Upper Table Front Ass'y (Stainless Steel Model)(For 5-6mm, 1050W/1650W)	1	

5-3 EXTENSION TABLE GROUP (For 850W/1050W/1650W) M7-5-300001 M7-5-300011

REF. NO.	PART NO.	DESCRIPTION	Q'TY	REMARKS
	M7-5-310011	Upper Table Front Ass'y (For 9mm, 1050W/1650W)	1	
	M7-5-310011S	Upper Table Front Ass'y (Stainless Steel Model)(For 9mm, 1050W/1650W)	1	
12	M7-5-320001	Upper Table Rear Ass'y (For 1050W/1650W)	1	SEE PAGE C137
	M7-5-320001S	Upper Table Rear Ass'y (Stainless Steel Model)(For 1050W/1650W)	1	
16	M7-5-201600	Cover	1	
	M7-5-201600S	Cover (Stainless Steel Model)	1	
17	T7-2-10280	Block	1	
23	HBS0616N	HBS, M6×16 (N)(For 850W)	6	
		HBS, M6×16 (N)(For 1050W/1650W)	14	
24	HBS0616S	HBS, M6×16 (Stainless Steel Model) (For 1050W/1650W)	8	
27	THS0630N	THS, M6×30 (N)	2	
	THS0630S	THS, M6×30 (Stainless Steel Model)	2	
29	TMS0512S	TMS, M5×12 (SUS)	4	
30	TMS0520S	TMS, M5×20 (SUS)	2	
31	FMS0512S	FMS, M5×12 (SUS)	2	
33	HN05	HN, M5	2	
34	HN06	HN, M6 (For 850W)	2	
		HN, M6 (For 1050W/1650W)	6	
36	SW06	SW, M6 (For 850W)	8	
		SW, M6 (For 1050W/1650W)	16	
37	SW06S	SW, M6 (Stainless Steel Model) (For 1050W/1650W)	4	
41	PW06A	PW, M6 (A)	2	
42	PW06C	PW, M6 (C)(For 850W)	6	
		PW, M6 (C)(For 1050W/1650W)	18	
43	PW06CS	PW, M6 (C)(Stainless Steel Model) (For 1050W/1650W)	8	

5-3-1 UPPER TABLE FRONT ASS'Y (For 1050W/1650W)

M7-5-310001
M7-5-310011

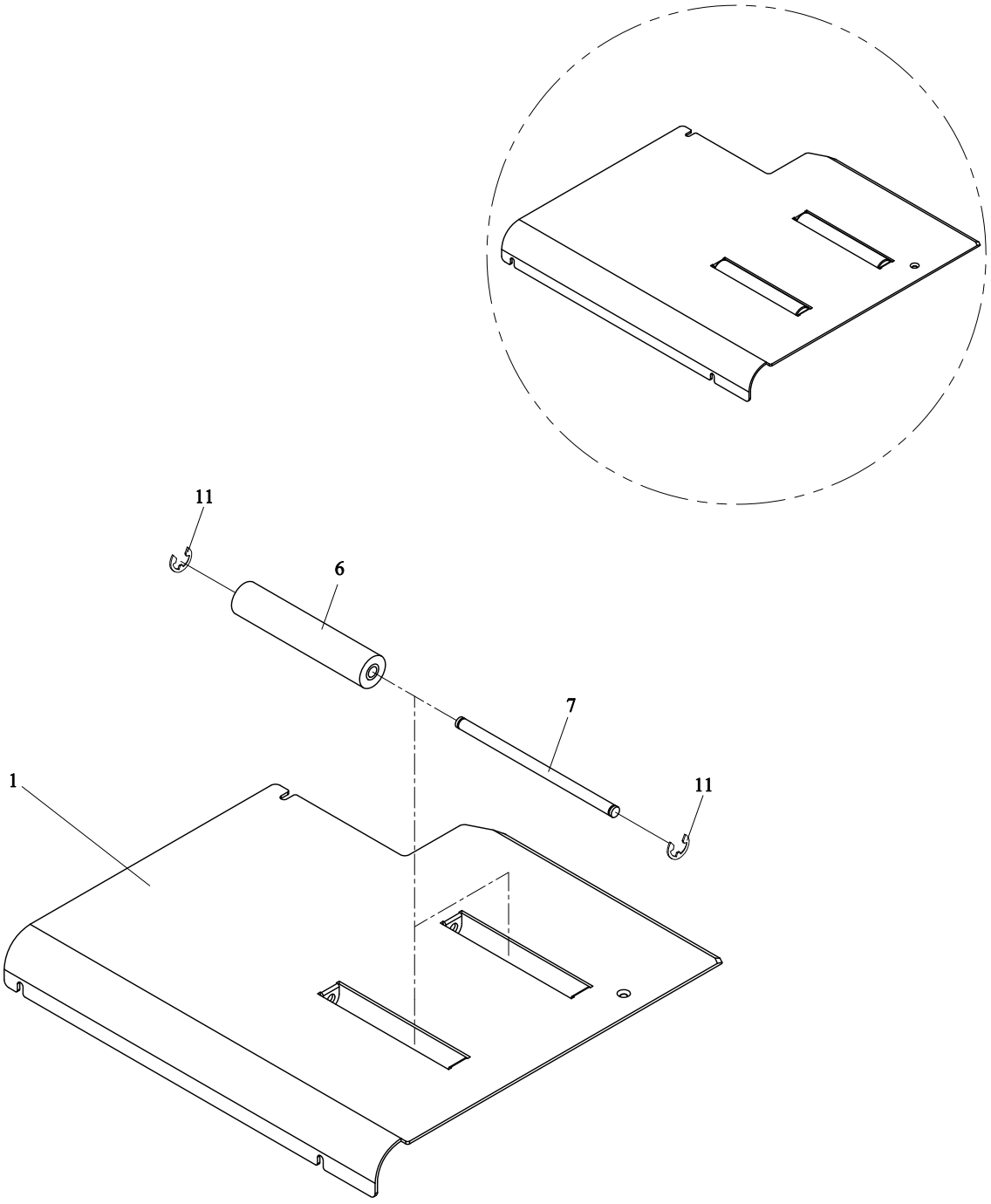

5-3-1 UPPER TABLE FRONT ASS'Y (For 1050W/1650W) M7-5-310001 M7-5-310011

REF. NO.	PART NO.	DESCRIPTION	Q'TY	REMARKS
	M7-5-310001	Upper Table Front Ass'y (For 5-6mm, 1050W/1650W)	1	
	M7-5-310001S	Upper Table Front Ass'y (Stainless Steel Model)(For 5-6mm, 1050W/1650W)	1	
	M7-5-310011	Upper Table Front Ass'y (For 9mm, 1050W/1650W)	1	
	M7-5-310011S	Upper Table Front Ass'y (Stainless Steel Model)(For 9mm, 1050W/1650W)	1	
1	M7-5-311101	Upper Table Front (For 5-6mm)	1	
	M7-5-311101S	Upper Table Front (Stainless Steel Model) (For 5-6mm)	1	
	M7-5-311111	Upper Table Front (For 9mm)	1	
	M7-5-311111S	Upper Table Front (Stainless Steel Model) (For 9mm)	1	
6	T7-5-40410	Table Roller (130mm)	2	
	T7-5-40411	Table Roller (130mm)(Stainless Steel Model)	2	
7	T7-5-40420	Table Roller Shaft	2	
	T7-5-40420S	Table Roller Shaft (Stainless Steel Model)	2	
11	ER07	Snap Ring, E-7	4	
	ER07S	Snap Ring, E-7 (Stainless Steel Model)	4	

5-3-2 UPPER TABLE REAR ASS'Y M7-5-320001
(For 1050W/1650W)

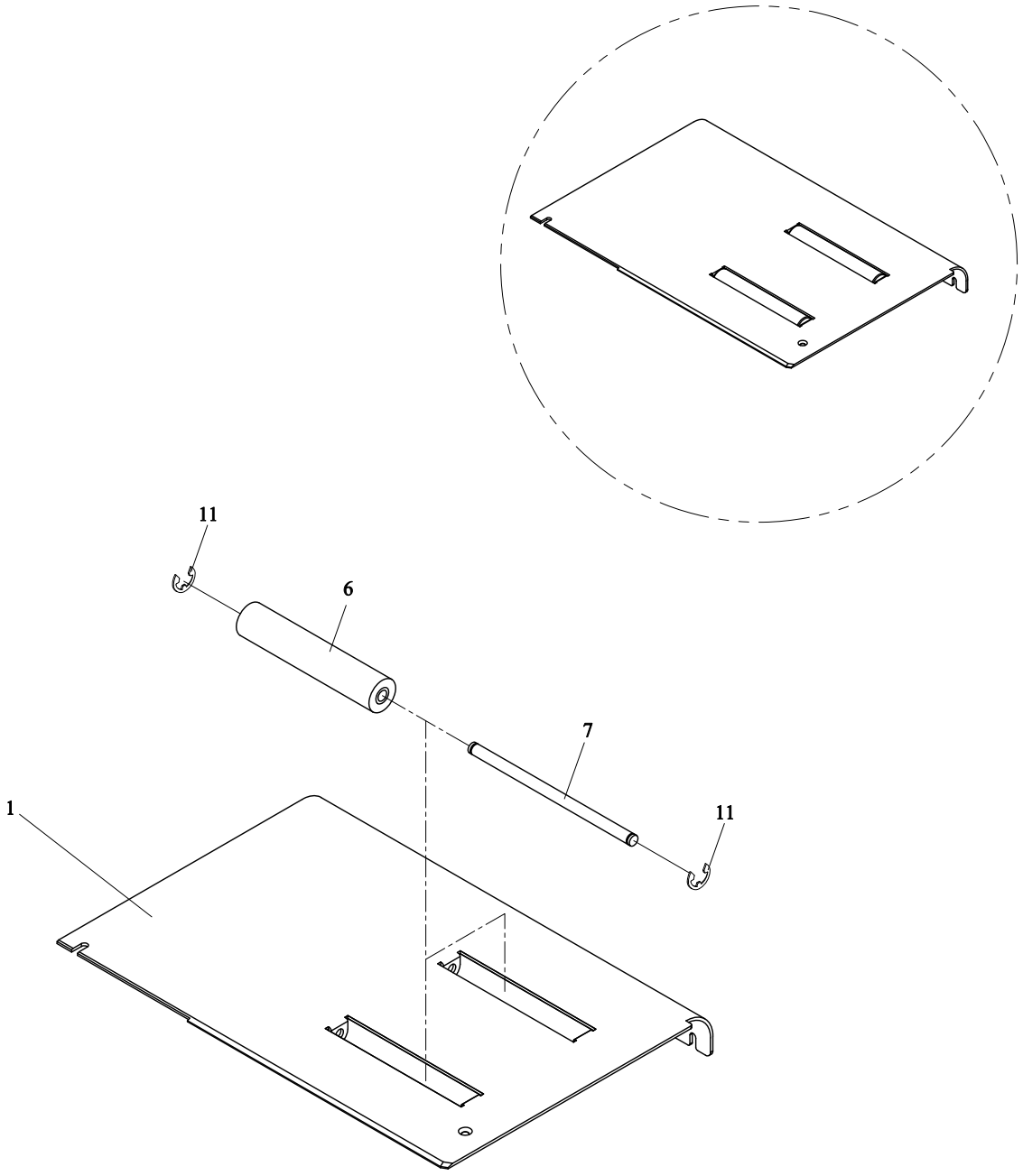

5-3-2 UPPER TABLE REAR ASS'Y (For 1050W/1650W) M7-5-320001

REF. NO.	PART NO.	DESCRIPTION	Q'TY	REMARKS
	M7-5-320001	Upper Table Rear Ass'y (For1050W/1650W)	1	
	M7-5-320001S	Upper Table Rear Ass'y (Stainless Steel Model)(For 1050W/1650W)	1	
1	M7-5-321101	Upper Table Rear	1	
	M7-5-321101S	Upper Table Rear (Stainless Steel Model)	1	
6	T7-5-40410	Table Roller (130mm)	2	
	T7-5-40411	Table Roller (130mm)(Stainless Steel Model)	2	
7	T7-5-40420	Table Roller Shaft	2	
	T7-5-40420S	Table Roller Shaft (Stainless Steel Model)	2	
11	ER07	Snap Ring, E-7	4	
	ER07S	Snap Ring, E-7 (Stainless Steel Model)	4	

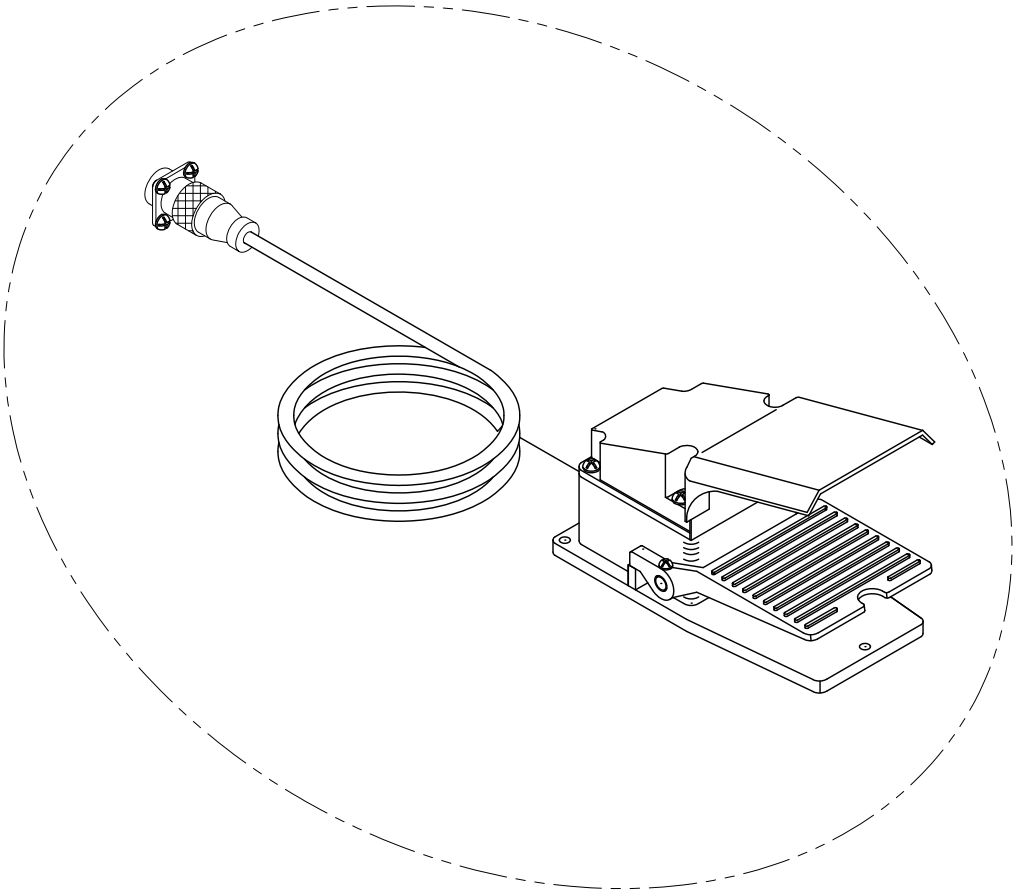

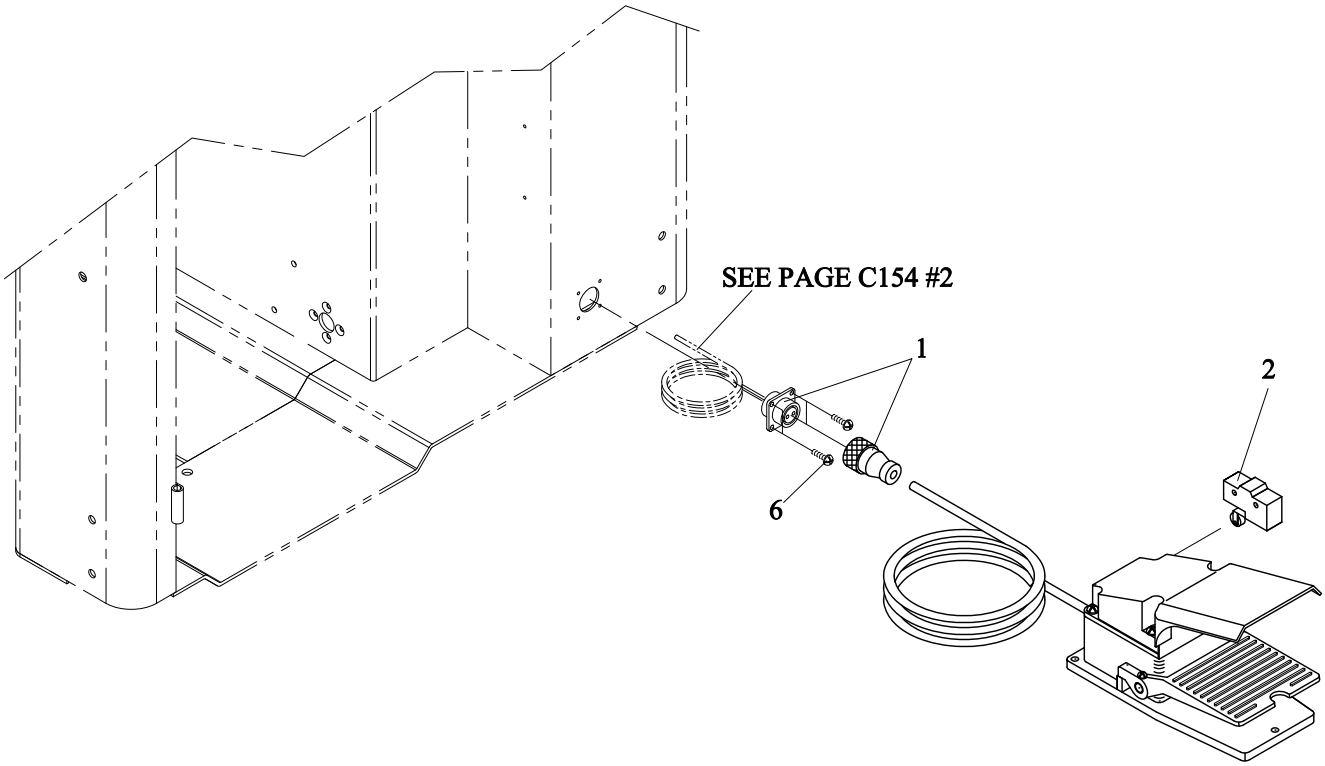
SEE PAGE C154 #2
1
2
6

5-4 PEDAL CONTROL SET (OPTION) T7-6-40001

REF. NO.	PART NO.	DESCRIPTION	Q'TY	REMARKS
1	T6-6-10350	Connector (Foot Switch)	1	
2	T7-5-20130	Micro Switch	1	
6	TMS0308N	TMS, M3×8 (N)	4	
	TMS0308S	TMS, M3×8 (Stainless Steel Model)	4	

6 ELECTRIC CONTROL UNIT M7-6-900004 M7-6-900014

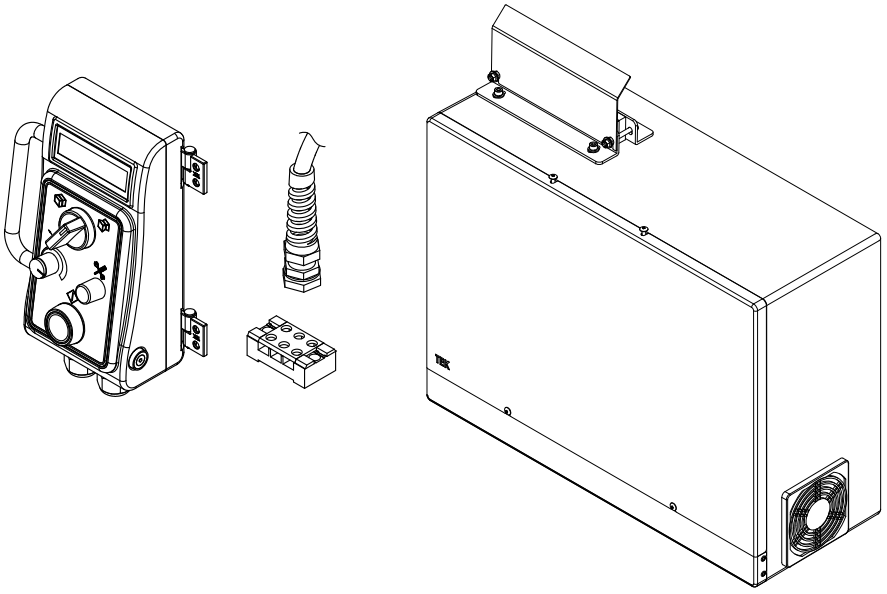

1

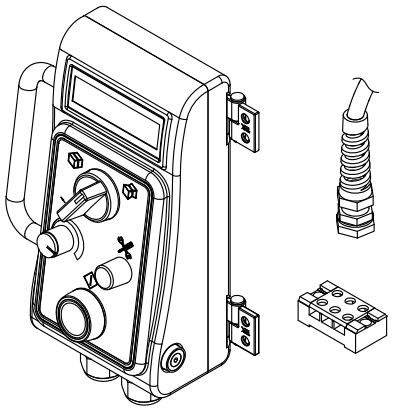

3

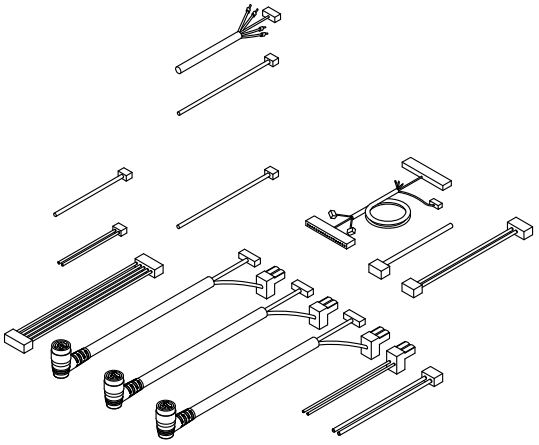

2

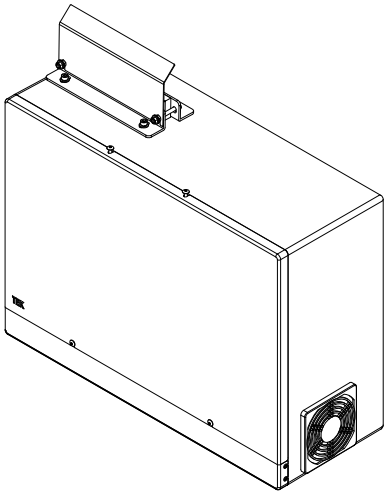

4

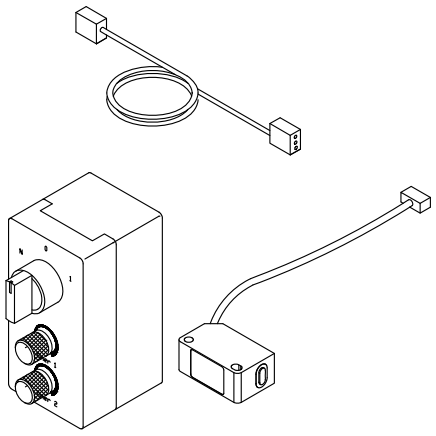

(Option)

6 ELECTRIC CONTROL UNIT M7-6-900004 M7-6-900014

REF. NO.	PART NO.	DESCRIPTION	Q'TY	REMARKS
	M7-6-900004	Electric Control Unit (For 220V~ 240V, 550W)	1	
	M7-6-900004S	Electric Control Unit (Stainless Steel Model) (For 220V~ 240V, 550W)	1	
	M7-6-900014	Electric Control Unit (For 110V, 550W)	1	
	M7-6-900014S	Electric Control Unit (Stainless Steel Model) (For 110V, 550W)	1	
	M7-6-900044	Electric Control Unit (For 220V~ 240V, 650W~1050W)	1	
	M7-6-900044S	Electric Control Unit (Stainless Steel Model) (For 220V~ 240V, 650W~1050W)	1	
	M7-6-900054	Electric Control Unit (For 110V, 650W~1050W)	1	
	M7-6-900054S	Electric Control Unit (Stainless Steel Model) (For 110V, 650W~1050W)	1	
	M7-6-900064	Electric Control Unit (For 220V~ 240V, 1250W/1650W)	1	
	M7-6-900064S	Electric Control Unit (Stainless Steel Model) (For 220V~ 240V, 1250W/1650W)	1	
	M7-6-900074	Electric Control Unit (For 110V, 1250W/1650W)	1	
	M7-6-900074S	Electric Control Unit (Stainless Steel Model) (For 110V, 1250W/1650W)	1	
1	M7-6-100030	Control Panel Group (Europe)(For 550W)	1	SEE PAGE C145
	M7-6-100030S	Control Panel Group (Europe)(Stainless Steel Model)(For 550W)	1	
	M7-6-100040	Control Panel Group (Europe) (For 650W~1650W)	1	
	M7-6-100040S	Control Panel Group (Europe)(Stainless Steel Model)(For 650W~1650W)	1	
	M7-6-100050	Control Panel Group (America)(For 550W)	1	
	M7-6-100050S	Control Panel Group (America)(Stainless Steel Model)(For 550W)	1	
	M7-6-100060	Control Panel Group (America) (For 650W~1650W)	1	
	M7-6-100060S	Control Panel Group (America)(Stainless Steel Model)(For 650W~1650W)	1	
2	M7-6-200003	Electric Control Group (Without Wire) (For 220V~240V)	1	SEE PAGE C149
	M7-6-200003S	Electric Control Group (Without Wire) (Stainless Steel Model)(For 220V~240V)	1	
	M7-6-200013	Electric Control Group (Without Wire) (For 110V)	1	

6 ELECTRIC CONTROL UNIT M7-6-900004 M7-6-900014

REF. NO.	PART NO.	DESCRIPTION	Q'TY	REMARKS
	M7-6-200013S	Electric Control Group (Without Wire) (Stainless Steel Model)(For 110V)	1	
3	M7-6-300003	Wires Group (For 550W)	1	SEE PAGE C153
	M7-6-300013	Wires Group (For 650W~1050W)	1	
	M7-6-300023	Wires Group (For 1250W/1650W)	1	
4	M7-6-400000	Photo Eye Timer Box Group (Option)	1	SEE PAGE C159

6-1 CONTROL PANEL GROUP M7-6-100030 M7-6-100040

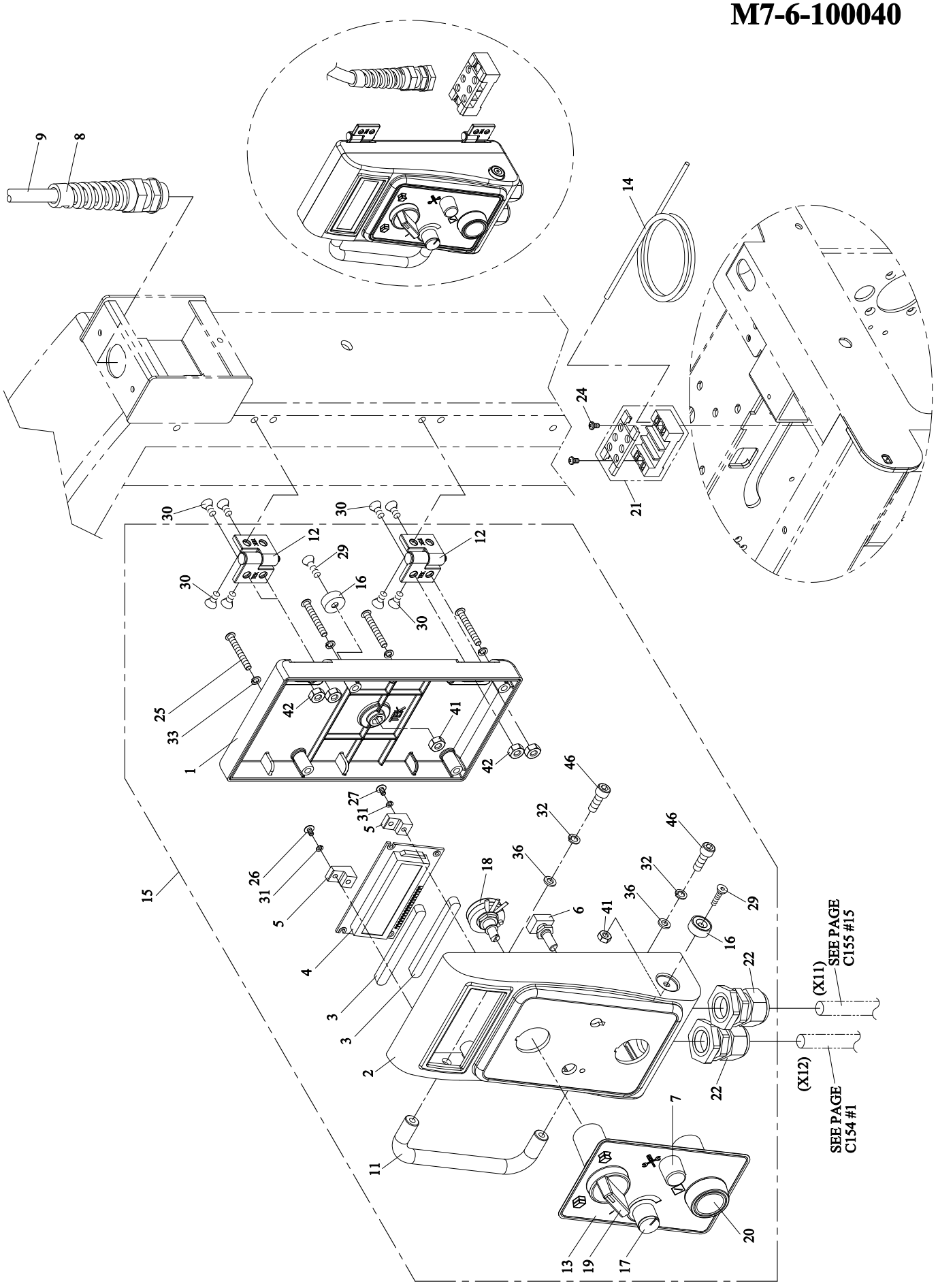

6-1 CONTROL PANEL GROUP M7-6-100030 M7-6-100040

REF. NO.	PART NO.	DESCRIPTION	Q'TY	REMARKS
	M7-6-100030	Control Panel Group (Europe)(For 550W)	1	
	M7-6-100030S	Control Panel Group (Europe)(Stainless Steel Model)(For 550W)	1	
	M7-6-100040	Control Panel Group (Europe) (For 650W~1650W)	1	
	M7-6-100040S	Control Panel Group (Europe)(Stainless Steel Model)(For 650W~1650W)	1	
	M7-6-100050	Control Panel Group (America)(For 550W)	1	
	M7-6-100050S	Control Panel Group (America)(Stainless Steel Model)(For 550W)	1	
	M7-6-100060	Control Panel Group (America) (For 650W~1650W)	1	
	M7-6-100060S	Control Panel Group (America)(Stainless Steel Model)(For 650W~1650W)	1	
1	M7-6-101101	Control Box	1	
2	M7-6-101201	Control Plate	1	
3	M7-6-101300	Rubber	2	
4	M7-6-101400	LCD	1	
5	M7-6-101501	Bracket	2	
6	M7-6-101601	Encoder	1	
7	M7-6-101701	Knob	1	
8	M7-6-101800	Flex-Protection Cable Gland	1	
9	TT-5-20120	Power Cord (Europe)	1	
	T5-4-10324	Power Cord (America)	1	
	T5-4-10323	Power Cord (For CSA)(Option)	1	
11	M7-6-102100	Handle	1	
	M7-6-102100S	Handle (Stainless Steel Model)	1	
12	M7-6-102200	Hinges	2	
13	LA-10191	Label	1	
14	EW720105B004	Wire Ass'y (For 550W)	1	
	EW720106C004	Wire Ass'y (For 650W~1650W)	1	
15	M7-6-100100	Control Panel Ass'y	1	
	M7-6-100100S	Control Panel Ass'y (Stainless Steel Model)	1	
16	M7-6-102001	Magnet Catch	2	
17	T5-4-10222	Knob (Hole φ 6.0)	1	
18	T5-4-10232	Variable Resistor (5K)(φ 6.0)	1	
19	T6-6-40016	2P. Selector Switch	1	
20	T7-6-20480	Restart Switch (2NO)	1	
21	T6-6-10320	Heater Terminal	1	
22	T6-6-10980	Cable Gland (PG11)	2	
24	PMS0408	PMS, M4×8	2	
25	PMS0430	PMS, M4×30	4	
	PMS0430S	PMS, M4×30 (Stainless Steel Model)	4	

REF. NO.	PART NO.	DESCRIPTION	Q'TY	REMARKS
26	TMS0308N	TMS, M3×8 (N)	1	
27	TMS0312	TMS, M3×12	1	
29	FHS0416S	FHS, M4×16 (SUS)	2	
30	FMS0508N	FMS, M5×8 (N)	8	
	FMS0508S	FMS, M5×8 (Stainless Steel Model)	8	
31	SW03	SW, M3	2	
32	SW05	SW, M5	2	
33	SW04	SW, M4	4	
	SW04S	SW, M4 (Stainless Steel Model)	4	
36	PW05	PW, M5	2	
41	NTE04	NTE, M4	2	
42	HN05	HN, M5	4	
46	HBS0512N	HBS, M5×12 (N)	2	

6-2 ELECTRIC CONTROL GROUP M7-6-200003 M7-6-200013

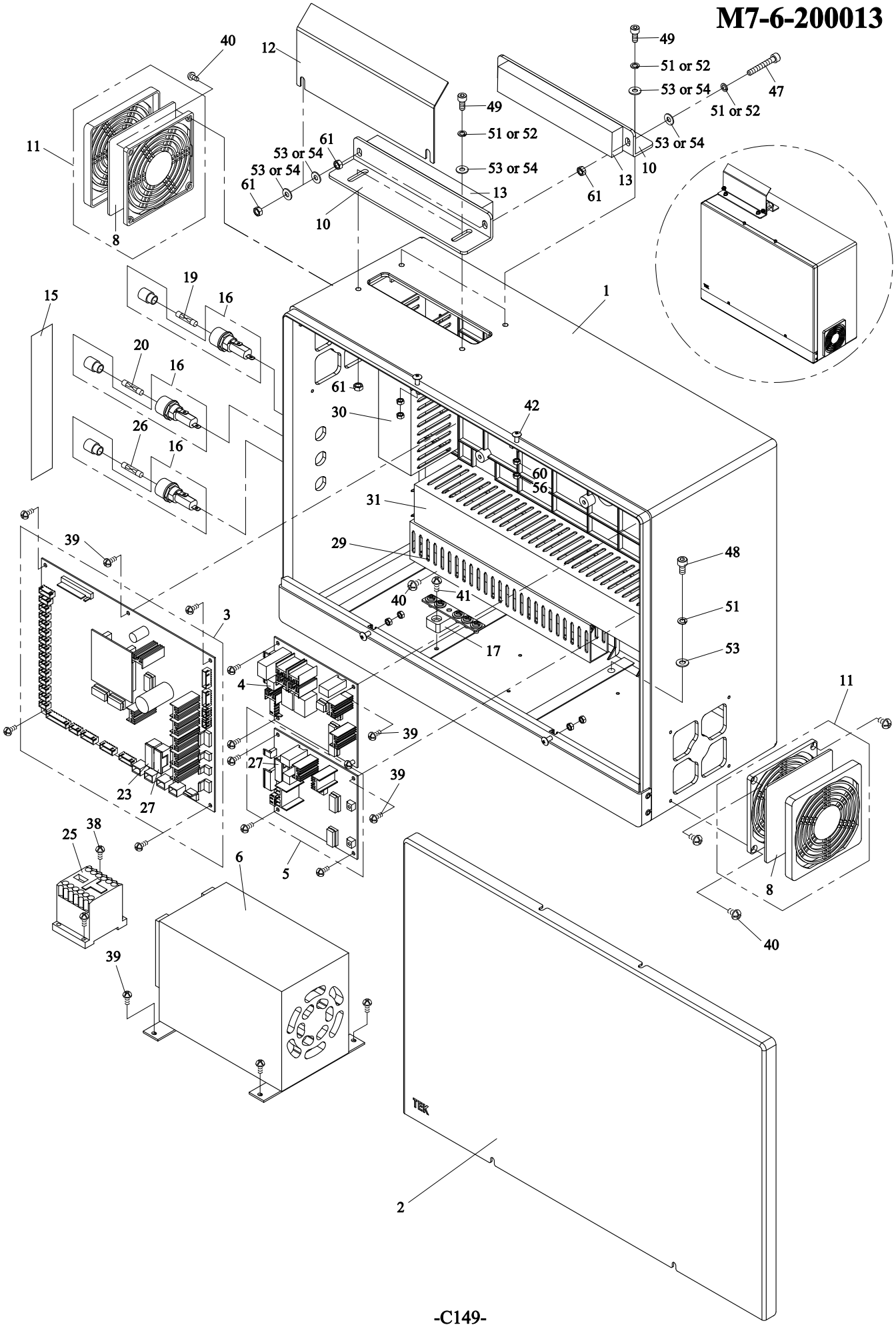

REF. NO.	PART NO.	DESCRIPTION	Q'TY	REMARKS
	M7-6-200003	Electric Control Group (For 220V~ 240V)	1	
	M7-6-200003S	Electric Control Group (Without Wire) (Stainless Steel Model)(For 220V~240V)	1	
	M7-6-200013	Electric Control Group (For 110V)	1	
	M7-6-200013S	Electric Control Group (Without Wire) (Stainless Steel Model)(For 110V)	1	
1	M7-6-201103	Electric Box	1	
2	M7-6-201201	Cover	1	
3	M7-6-201301	Main P.C.B (AP1)	1	
4	M7-6-201400	M4/M5 P.C.B (AP3)	1	
5	M7-6-201500	Heater P.C.B (AP2)	1	
6	M7-6-201600	Power Supply	1	
8	M7-6-201800	Filter	2	
10	M7-6-202100	Clamp	2	
	M7-6-202100S	Clamp (Stainless Steel Model)	2	
11	M7-6-200100	Filter Set	2	
12	M7-6-202201	Cover	1	
	M7-6-202201S	Cover (Stainless Steel Model)	1	
13	M7-6-202300	Foam Rubber	2	
15	LA-20160	Label	1	
16	T5-4-10160	Fuse Holder	3	
17	T5-4-10310	Earth Plate (5P)	1	
19	T6-6-30032	Fuse (3A, 30mm)(For 220V~240V)	1	
	T6-6-30033	Fuse (5A, 30mm)(For 110V)	1	
20	T6-6-30133	Fuse (10A, 30mm)	1	
23	TT-5-10150	Fuse (1A, 20mm)	1	
25	T7-6-10690	Magnetic Switch	1	
26	FU30040	Fuse (4A, 30mm)	1	
27	FU20040	Fuse (4A, 20mm)	2	
29	WD25450250	Wire Duct 25×45×250	1	
30	WD45650170	Wire Duct 45×65×170	1	
31	WD45650425	Wire Duct 45×65×425	1	
38	TMS0312	TMS, M3×12	2	
39	TMS0308N	TMS, M3×8 (N)	17	
40	TTP0412BN	TTP, M4×12 (B)(N)	15	

REF. NO.	PART NO.	DESCRIPTION	Q'TY	REMARKS
41	TMS0412N	TMS, M4×12 (N)	1	
42	TMS0420N	TMS, M4×20 (N)	4	
	TMS0420S	TMS, M4×20 (Stainless Steel Model)	4	
47	HBS0540N	HBS, M5×40 (N)	2	
	HBS0540S	HBS, M5×40 (Stainless Steel Model)	2	
48	HBS0510N	HBS, M5×10 (N)	4	
49	HBS0516N	HBS, M5×16 (N)	4	
	HBS0516S	HBS, M5×16 (Stainless Steel Model)	4	
51	SW05	SW, M5	12	
52	SW05S	SW, M5 (Stainless Steel Model)	8	
53	PW05	PW, M5	14	
54	PW05S	PW, M5 (Stainless Steel Model)	10	
56	NTE04	NTE, M4	4	
60	HN04	HN, M4	4	
61	HN05	HN, M5	10	
	HN05S	HN, M5 (Stainless Steel Model)	10	

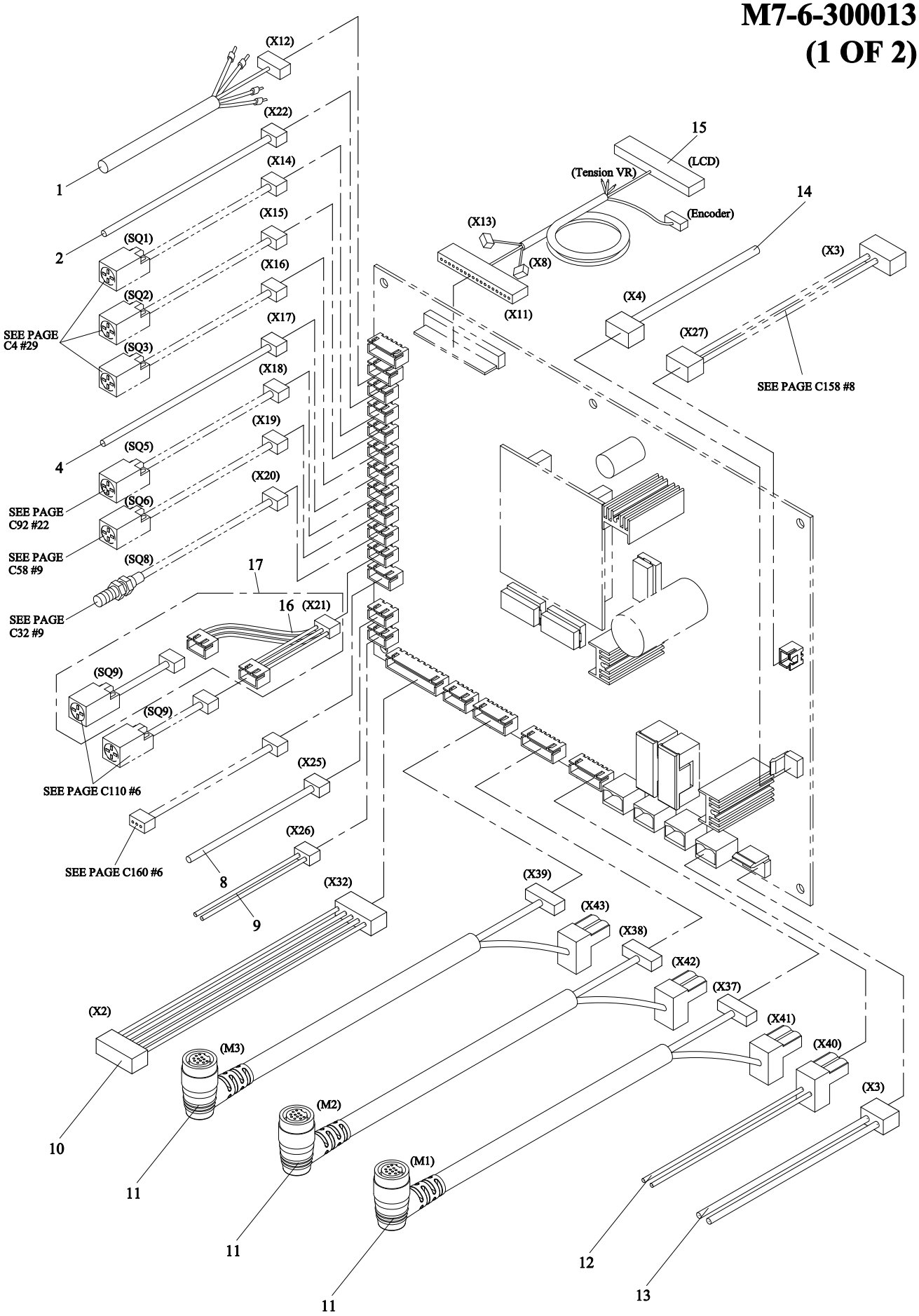
(X12)
(X22)
(X14)
(X15)
(X16)
(X17)
(X18)
(X19)
(X20)
(X21)
(X25)
(X26)
(X32)
(X39)
(X43)
(X38)
(X42)
(X37)
(X41)
(X40)
(X3)
(X4)
(X27)
(X13)
(X8)
(X11)
15
(LCD)
(Tension VR)
(Encoder)
14
(SQ1)
(SQ2)
(SQ3)
(SQ5)
(SQ6)
(SQ8)
(SQ9)
(SQ9)
1
2
4
16
17
8
9
10
11
11
11
12
13
(X2)
(M3)
(M2)
(M1)
SEE PAGE C4 #29
SEE PAGE C92 #22
SEE PAGE C58 #9
SEE PAGE C32 #9
SEE PAGE C110 #6
SEE PAGE C160 #6
SEE PAGE C158 #8

REF. NO.	PART NO.	DESCRIPTION	Q'TY	REMARKS
	M7-6-300003	Wires Group (For 550W)	1	
	M7-6-300013	Wires Group (For 650W~1050W)	1	
	M7-6-300023	Wires Group (For 1250W/1650W)	1	
1	EW720105BX12	Wire Ass'y X12 (Control Panel)(For 550W)	1	
	EW720106CX12	Wire Ass'y X12 (Control Panel) (For 650W~1050W)	1	
	EW720112FX12	Wire Ass'y X12 (Control Panel) (For 1250W/1650W)	1	
2	EW720005BX22	Wire Ass'y X22 (Foot Switch)(For 550W) (Option)	1	
	EW720006CX22	Wire Ass'y X22 (Foot Switch) (For 650W~1050W)(Option)	1	
	EW720012FX22	Wire Ass'y X22 (Foot Switch) (For 1250W/1650W)(Option)	1	
4	EW720005BX17	Wire Ass'y X17 (SQ4)(For 550W)	1	
	EW720006CX17	Wire Ass'y X17 (SQ4)(For 650W~1050W)	1	
	EW720012FX17	Wire Ass'y X17 (SQ4)(For 1250W/1650W)	1	
8	EW720005BX25	Wire Ass'y X25 (Reel Release Switch) (For 550W)	1	
	EW720010EX25	Wire Ass'y X25 (Reel Release Switch) (For 650W~1050W)	1	
	EW720012FX25	Wire Ass'y X25 (Reel Release Switch) (For 1250W/1650W)	1	
9	EW720005BX26	Wire Ass'y X26 (Machine Ready)	1	
10	EW720005BX32	Wire Ass'y X32 (Control Wire for M4/M5)	1	
11	M7-6-300100	Motor Cable (X37/X41, X38/X42, X39/X43) (M1, M2, M3)	3	SEE PAGE C3, C27, C37
12	EW720005BX40	Wire Ass'y X40 (Power I for Main PCB)	1	
13	EW720005BX03	Wire Ass'y X3 (Power II for Main PCB)	1	
14	EW720005BX04	Wire Ass'y X4 (Reel)(For 550W)	1	
	EW720010EX04	Wire Ass'y X4 (Reel)(For 650W~1050W)	1	
	EW720012FX04	Wire Ass'y X4 (Reel)(For 1250W/1650W)	1	
15	EW720105BX11	Wire Ass'y X11/X13/X8 (Control Panel) (For 550W)	1	
	EW720106CX11	Wire Ass'y X11/X13/X8 (Control Panel) (For 650W~1050W)	1	
	EW720112FX11	Wire Ass'y X11/X13/X8 (Control Panel) (For 1250W/1650W)	1	

REF. NO.	PART NO.	DESCRIPTION	Q'TY	REMARKS
16	EW720005B005	Wire Ass'y (Foot Bar (Rear))(Option)	1	
17	M7-6-300200	Proximity Sensor Set (Foot Bar (Rear))(Option)	1	SEE PAGE C109

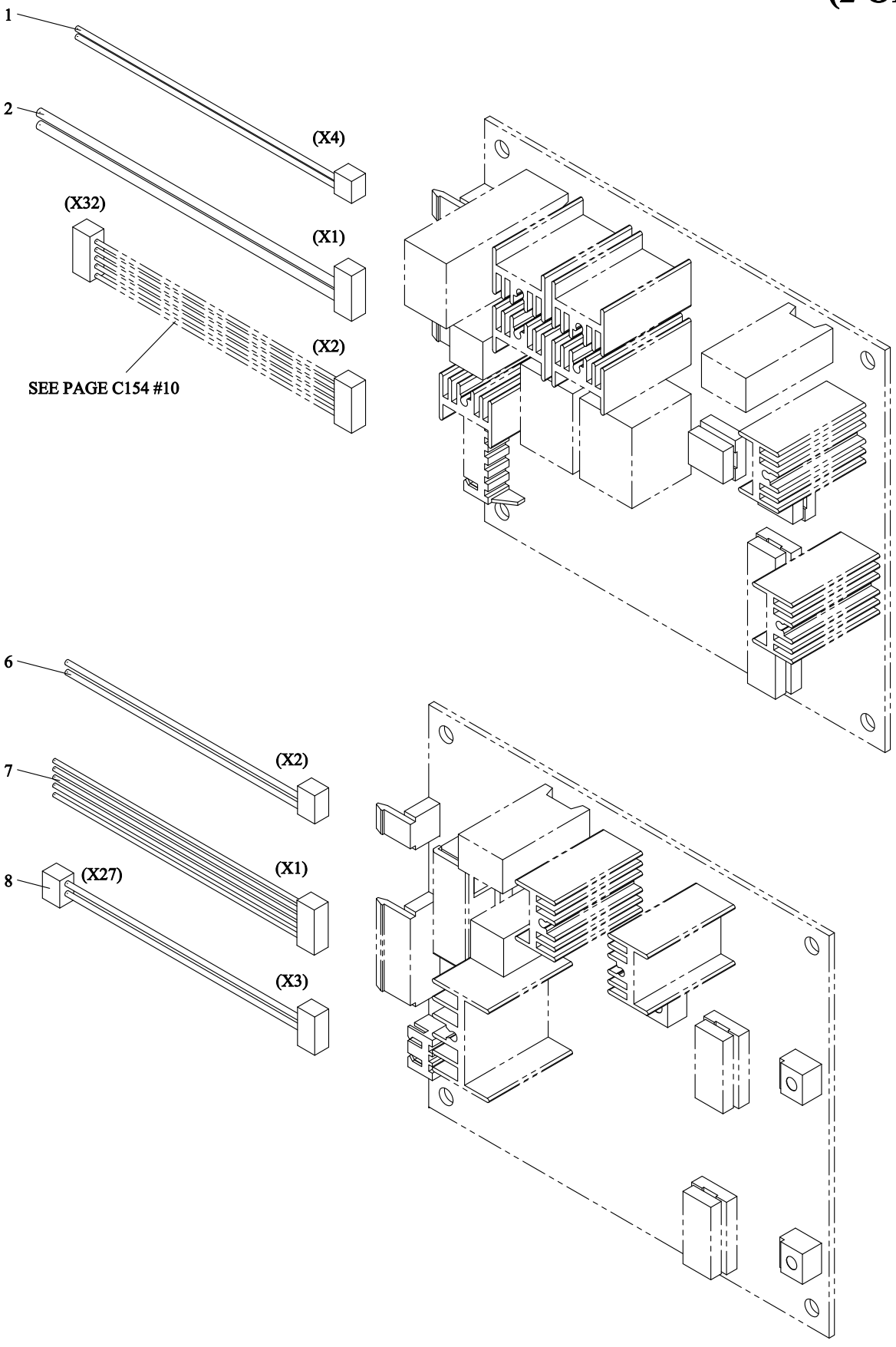
1
2
(X4)
(X32)
(X1)
(X2)
SEE PAGE C154 #10
6
7
8
(X2)
(X1)
(X27)
(X3)

REF. NO.	PART NO.	DESCRIPTION	Q'TY	REMARKS
1	EW720005BM04	Wire Ass'y X4 (Power for M4/M5 PCB)	1	
2	EW720005BM01	Wire Ass'y X1 (Power for M4/M5)(For 550W)	1	
	EW720006CM01	Wire Ass'y X1 (Power for M4/M5) (For 650W~1050W)	1	
	EW720012FM01	Wire Ass'y X1 (Power for M4/M5) (For 1250W/1650W)	1	
6	EW720005BH02	Wire Ass'y X2 (Power for H.T PCB)	1	
7	EW720005BH01	Wire Ass'y X1 (H.T/Sensor/Fan) (For 550W~1050W)	1	
	EW720012FH01	Wire Ass'y X1 (H.T/Sensor/Fan) (For 1250W/1650W)	1	
8	EW720005BH03	Wire Ass'y X3 (Heater Ready)	1	

6-4 PHOTO EYE TIMER BOX GROUP M7-6-400000 (OPTION)

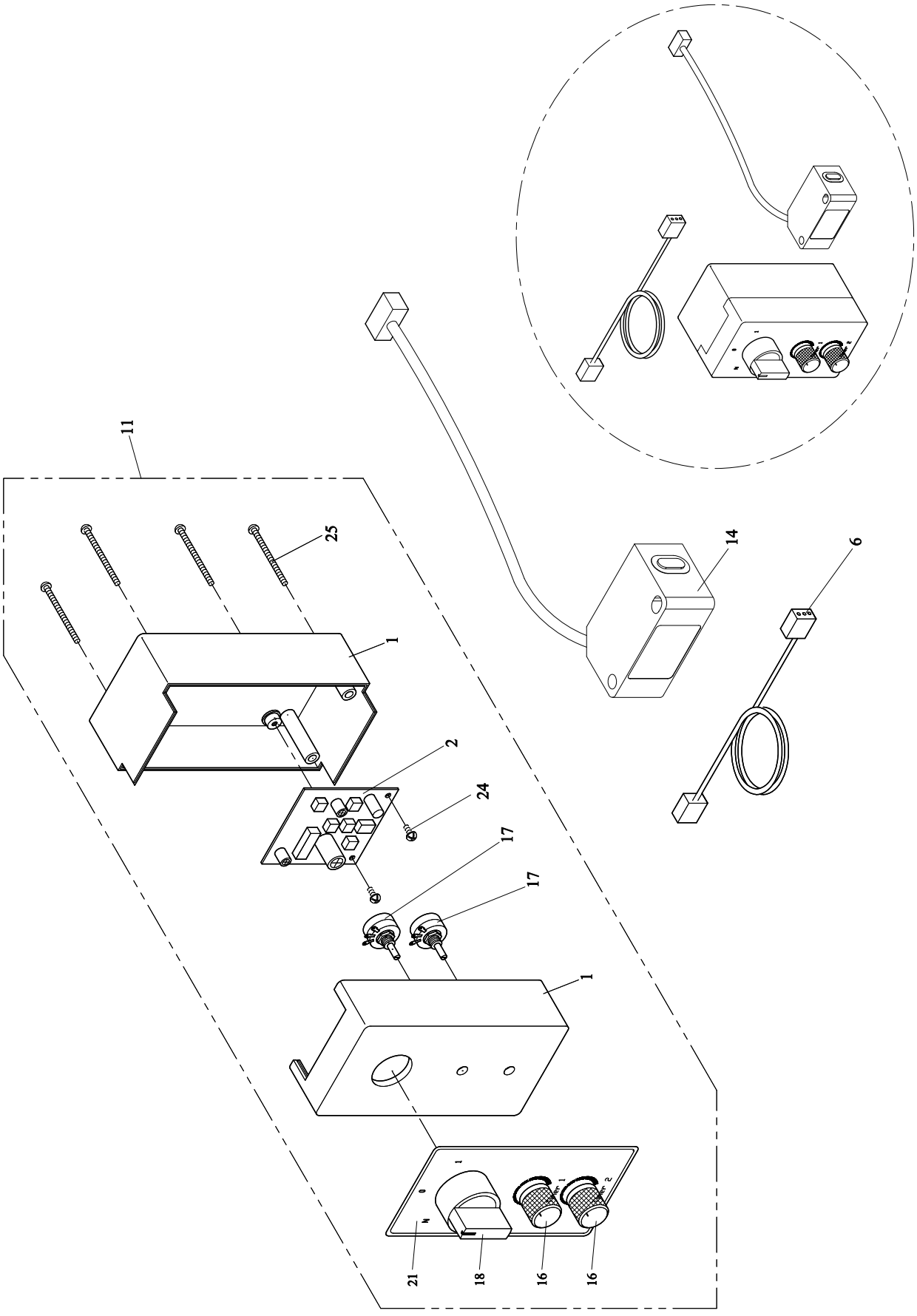

6-4 PHOTO EYE TIMER BOX GROUP (OPTION) M7-6-400000

REF. NO.	PART NO.	DESCRIPTION	Q'TY	REMARKS
1	M7-6-401100	Box	1	
2	M7-6-401200	P.C. Board	1	
6	EW720005B006	Wire Ass'y	1	
11	M7-6-400100	Photo Eye Timer Box Ass'y	1	
14	M7-6-301200	Photo Eye (PH1)	1	SEE PAGE C3
16	T5-4-10222	Knob (Hole ϕ6.0)	2	
17	T5-4-10232	Variable Resistor (5K)(ϕ6.0)	2	
18	T6-6-10570	3P. Selector Switch	1	
21	LA-20050	Label	1	
24	PMS0305	PMS, M3×5	2	
25	PMS0345	PMS, M3×45	4	

05/2012